# Kit Specific Component List

## *27697*

Image may not depict actual kit.

### HARDWARE CONTENT

| Item | Part # | Description | Qty |
|---|---|---|---|
| A | 26498-009 | Harn – USB Display Cable | 1 |
| B | 26498-006 | Harn – Main Harness | 1 |
| C | 27050 | 3H/3P Display | 1 |
| D | 24503 | Fuse ATM 3A | 1 |
| E | 24501 | Fuse Holder ATM | 1 |
| F | 24502 | Fuse Holder ATO/ATC | 1 |
| G | 24661 | Heat Shrinkable Butt Splice 14-16GA | 1 |
| H | 24752 | Heat Shrinkable Butt Splice 10-12GA | 3 |
| I | 24748 | Ring Terminal 3/8” 10-12GA | 2 |
| J | 24524 | Ins. Female .187” Term. 14-16GA | 1 |
| K | 24594 | Ins. Female .250” Term. 14-16GA | 1 |

| Item | Part # | Description | Qty |
|---|---|---|---|
| L | 24561 | ATM Fuse Tap Adapter | 1 |
| M | 24542 | ATO/ATC Fuse Tap Adapter | 1 |
| N | 10466 | Zip Tie 8” Black | 20 |
| O | 17103 | Screw 5/16”-18 x 1” Zinc | 2 |
| P | 18542 | Flat Washer 5/16” Stainless | 2 |
| Q | 17263 | Screw 1/4”-14 x 1” Self-Tapping Zinc | 1 |
| R | 17494 | Screw 1/4”-14 x 2” Self-Tapping Zinc | 2 |
| S | 10530 | Hose Cutter Kit | 1 |
| T | 24504 | Fuse Low-Profile Mini 3A | 1 |
| U | 24505 | Low-Profile Mini Fuse Tap | 1 |
| V | 24547 | Fuse ATO/ATC 30A | 1 |

### MANIFOLD CONTENT

| Item | Part # | Description | Qty |
|---|---|---|---|
| AE | 72614 | Manifold ECU 3/8” | 1 |
| AF | 20947 | Air Line 3/8” | 60 ft. |

### FILTER CONTENT

| Item | Part # | Description | Qty |
|---|---|---|---|
| AI | 11217 | P Clamp, 1.5” Cushion | 1 |
| AJ | 11517 | Miniature Filter | 1 |
| AK | 17173 | Screw #14-1/4 x 3/4” Self-Tapping | 1 |
| AL | 20937 | Hose 1/4” Dia Poly | 5 ft. |
| AM | 22677 | Tee Fitting - 1/4” FNPT x (2) 1/4” PTC | 1 |
| AN | 21048 | Pressure-Relief Valve | 1 |

### COMPRESSOR

| Item | Part # | Description | Qty |
|---|---|---|---|
| AG | 16444 | Compressor | 1 |

### TANK

| Item | Part # | Description | Qty |
|---|---|---|---|
| AH | 11955 | 4 Gallon 5 Port Tank | 1 |

### HEIGHT CONTENT

| Item | Part # | Description | Qty |
|---|---|---|---|
| W | 34977 | HPACK- Height Sensor Linkage | 4 |
| X | 26894 | Height Sensor Assembly | 4 |
| Y | 26953-012 | Harn-12FT RL Height Sensor* | 1 |
| Z | 26953-013 | Harn-12FT RR Height Sensor* | 1 |
| AA | 26953-020 | Harn-20FT FL Height Sensor* | 1 |

| Item | Part # | Description | Qty |
|---|---|---|---|
| AB | 26953-021 | Harn-20FT FR Height Sensor* | 1 |
| AC | 10466 | Zip Tie 8” Black | 20 |
| AD | 17497 | Screw 10-16 x 1 3/4” Self-Tapping Zinc | 8 |
| AO | 11998 | Height Sensor Spacer | 4 |

* FL = Front left corner RL = Rear left corner
FR = Front right corner RR = Rear right corner

*Tank Fittings and Tank Hardware are listed on back of sheet*

**STOP!** Missing or damaged parts? Call Air Lift Company customer service at (800) 248-0892 for replacement parts.

## TANK FITTINGS

| Item | Part # | Description | Qty | Item | Part # | Description | Qty |
|---|---|---|---|---|---|---|---|
| AP | 21585 | Plug - 1/4” MNPT | 1 | AT | 21633 | 1/4” PTC Inflation Valve | 1 |
| AQ | 21737 | Plug - 3/8” MNPT | 1 | AU | 20946 | Air Line 1/4” | 2 ft. |
| AR | 21779 | Swivel Elbow - 1/4”MNPT x 1/4” PTC | 1 | AV | 21773 | Bushing - 3/8” MNPT x 1/8” MNPT | 1 |
| AS | 21867 | Swivel Elbow - 3/8”MNPT x 3/8” PTC | 1 | AW | 21854 | Swivel Elbow - 1/8”MNPT x 3/8” PTC | 2 |

## TANK HARDWARE

| Item | Part # | Description | Qty | Item | Part # | Description | Qty |
|---|---|---|---|---|---|---|---|
| BD | 18444 | 3/8” Flat Washer SAE | 8 | BF | 18435 | 3/8”-16 Nylon Nut | 4 |
| BE | 17188 | 3/8”-16 x 1.25 Hex Cap Screw | 4 | | | | |

STOP! Missing or damaged parts? Call Air Lift Company customer service at (800) 248-0892 for replacement parts.

# Air Lift Performance 3H™/3P™

PATENTED

AIR LIFT PERFORMANCE™

## INSTALLATION GUIDE

For maximum effectiveness and safety, please read these instructions completely before proceeding with installation.

*Failure to read these instructions can result in an incorrect installation.*

MN-946 • 021506 • ERN 7687

# Download the App for the Best #lifeonair

The Air Lift Performance 3 mobile app allows for full integration of your new 3H/3P control system on compatible mobile devices. Simply download the FREE app to not only take full control of your system, but to always have the latest system firmware with updates directly from the app.

Visit **air-lift.co/3app** to download.

See 3H/3P User Guide for instructions on pairing your device.

# TABLE OF CONTENTS


**Component List . . . . . 2**

**Introduction . . . . . 3**

Notation Explanation . . . . . 3

**Installing the Air Lift Performance 3H/3P Kit . . . . . 4**

Layout Overview . . . . . 4

Tank (Optional). . . . . 5

Filter. . . . . 6

Installing Harness . . . . . 7

Installing Air Lines . . . . . 9

Manifold. . . . . 10

Compressor (Optional) . . . . . 11

Height Sensors . . . . . 12

**Installation Diagram . . . . . 16**

**Troubleshooting Guide . . . . . 20**

**Leak Testing and Detection . . . . . 20**

**Permissible Modifications . . . . . 21**

**Display Mounting Template . . . . . 23**

**Height Sensor Install Tool. . . . . 25**

**Manifold Mounting Template . . . . . 27**

**16444 Compressor Mounting Template . . . . . 29**

**Limited Warranty and Returns Policy . . . . . 31**

**Replacement Information. . . . . 33**

**Contact Information . . . . . 33**

# Component List

Refer to Installation diagram on pages 16-17 for item illustrations.

**NOTE** *Some kits include parts in addition to or different from what is listed here. Those kits include an Installation Manual insert with a parts list for that kit.*

## HARDWARE CONTENT

| Item | Part # | Description | Qty |
|---|---|---|---|
| A | 26498-009 | Harn – USB Display Cable | 1 |
| B | 26498-006 | Harn – Main Harness | 1 |
| C | 27050 | 3H/3P Display | 1 |
| D | 24503 | Fuse ATM 3A | 1 |
| E | 24501 | Fuse Holder ATM | 1 |
| F | 24502 | Fuse Holder ATO/ATC | 1 |
| G | 24661 | Heat Shrinkable Butt Splice 14-16GA | 1 |
| H | 24752 | Heat Shrinkable Butt Splice 10-12GA | 3 |
| I | 24748 | Ring Terminal 3/8” 10-12GA | 2 |
| J | 24524 | Ins. Female .187” Term. 14-16GA | 1 |
| K | 24594 | Ins. Female .250” Term. 14-16GA | 1 |

| Item | Part # | Description | Qty |
|---|---|---|---|
| L | 24561 | ATM Fuse Tap Adapter | 1 |
| M | 24542 | ATO/ATC Fuse Tap Adapter | 1 |
| N | 10466 | Zip Tie 8” Black | 20 |
| O | 17103 | Screw 5/16”-18 x 1” Zinc | 2 |
| P | 18542 | Flat Washer 5/16” Stainless | 2 |
| Q | 17263 | Screw 1/4”-14 x 1” Self-Tapping Zinc | 1 |
| R | 17494 | Screw 1/4”-14 x 2” Self-Tapping Zinc | 2 |
| S | 10530 | Hose Cutter Kit | 1 |
| T | 24504 | Fuse Low Profile Mini 3A | 1 |
| U | 24505 | Low Profile Mini Fuse Tap | 1 |
| V | 24547 | Fuse ATO/ATC 30A | 1 |

## MANIFOLD CONTENT

**3/8” Manifold (27685, 27695)**

| Item | Part # | Description | Qty |
|---|---|---|---|
| AE | 72614 | Manifold ECU 3/8” | 1 |
| AF | 20947 | Air line 3/8” | 60 ft. |

**1/4” Manifold (27680, 27690)**

| Item | Part # | Description | Qty |
|---|---|---|---|
| AE | 72615 | Manifold ECU 1/4” | 1 |
| AF | 20946 | Air Line 1/4” | 60 ft. |

## FILTER CONTENT

| Item | Part # | Description | Qty |
|---|---|---|---|
| AI | 11217 | Clamp P, 1.5” Cushion | 1 |
| AJ | 11517 | Miniature Filter | 1 |
| AK | 17173 | Screw #14-1/4 x 3/4” self-tapping | 1 |
| AL | 20937 | Hose 1/4” Dia Poly | 5 ft. |
| AM | 22677 | Tee Fitting, 1/4” | 1 |
| AN | 21048 | Pressure-Relief Valve | 1 |

## COMPRESSOR (OPTIONAL)

| Item | Part # | Description | Qty |
|---|---|---|---|
| AG | 16444 | Compressor | 1 |

## TANK (OPTIONAL)

| Item | Part # | Description | Qty |
|---|---|---|---|
| AH | Varies | Tank | 1 |

## HEIGHT CONTENT (OPTIONAL INCLUDED IN 3H SYSTEMS ONLY)

| Item | Part # | Description | Qty |
|---|---|---|---|
| W | 34977 | HPACK- Height Sensor Linkage | 4 |
| X | 26894 | Height Sensor Assembly | 4 |
| Y | 26953-012 | Harn-12FT RL Height Sensor* | 1 |
| Z | 26953-013 | Harn-12FT RR Height Sensor* | 1 |

| Item | Part # | Description | Qty |
|---|---|---|---|
| AA | 26953-020 | Harn-20FT FL Height Sensor* | 1 |
| AB | 26953-021 | Harn-20FT FR Height Sensor* | 1 |
| AC | 10466 | Zip Tie 8” Black | 20 |
| AD | 17497 | Screw 10-16 x 1 3/4” Self Tapping Zinc | 8 |

STOP! Missing or damaged parts? Call Air Lift customer service at (800) 248-0892 for replacement parts.

* FL = Front left corner RL = Rear left corner
FR = Front right corner RR = Rear right corner

**⚠ WARNING** IF THE PRESSURE-BASED SYSTEM IS ALREADY INSTALLED BEFORE HEIGHT SENSOR INSTALLATION, MAKE SURE TO TURN OFF RISE ON START TO AVOID UNINTENDED AIRING UP. FAILURE TO FOLLOW THIS WARNING COULD RESULT IN EQUIPMENT DAMAGE, BODILY HARM OR DEATH (SEE USER GUIDE).

**⚠ WARNING** FLOOR JACKS CAN BE DANGEROUS. WHENEVER USING A FLOOR JACK, MAKE SURE IT IS RATED FOR THE LOAD IT IS LIFTING. CHECK THE VEHICLE OWNER'S MANUAL FOR INFORMATION ABOUT WHERE TO PLACE THE JACK. BEFORE RAISING THE VEHICLE, PLACE WHEEL CHOCKS IN FRONT AND BEHIND THE WHEELS TO PREVENT THE VEHICLE FROM ROLLING. ALWAYS USE JACK STANDS TO SUPPORT THE VEHICLE. NEVER GET UNDER OR PLACE ANY BODY PARTS UNDER A VEHICLE THAT IS SOLELY SUPPORTED BY THE JACK.

**⚠ CAUTION** REMOVE ALL FUSES WHEN JUMP-STARTING OR WELDING ON THE VEHICLE. FAILURE TO DO SO COULD DAMAGE THE MANIFOLD.

# Introduction

The purpose of this publication is to assist with the installation, maintenance and troubleshooting of Air Lift Performance 3H/3P.

Read and understand the entire installation guide before beginning installation or performing any maintenance, service or repair. The information includes step-by-step installation information, installation templates and a troubleshooting guide.

Air Lift Company reserves the right to make changes and improvements to its Air Lift Performance products and publications at any time. For the latest version of this manual, contact Air Lift Company at (800) 248-0892 or visit airliftperformance.com.

## NOTATION EXPLANATION

Hazard notations appear in various locations in this publication. Information which is highlighted by one of these notations must be observed to help minimize risk of personal injury or possible improper installation which may render the vehicle unsafe. Notes are used to help emphasize areas of procedural importance and provide helpful suggestions. The following definitions explain the use of these notations as they appear throughout this guide.

**⚠ DANGER** INDICATES IMMEDIATE HAZARDS WHICH WILL RESULT IN SEVERE PERSONAL INJURY OR DEATH.

**⚠ WARNING** INDICATES HAZARDS OR UNSAFE PRACTICES WHICH COULD RESULT IN SEVERE PERSONAL INJURY OR DEATH.

**⚠ CAUTION** INDICATES HAZARDS OR UNSAFE PRACTICES WHICH COULD RESULT IN DAMAGE TO THE MACHINE OR MINOR PERSONAL INJURY.

**NOTE** *Indicates a procedure, practice or hint which is important to highlight.*

# Installing Air Lift Performance 3H/3P Kit

## LAYOUT OVERVIEW

**NOTE** *For a complete installation diagram, see Pages 16-17. See Page 2 for a complete parts list.*

### *Layout*

1. Plan component location first. Ideally, the manifold should be located at a level above the compressor and tank to avoid compressor ingested water from gathering in the manifold (fig. 1). This is most important for vehicles operated in below-freezing climates.
2. Prior to mounting components, check to make sure:
   - the electrical harness connections will reach the manifold and compressor.
   - the compressor leader hose will reach the tank.
   - the air lines will route cleanly through the vehicle without kinking or bending.

**NOTE** *Be sure to install all components as far as possible from any heat sources (figs. 2 and 3). Plan and prepare harness and air line routing thru the vehicle. Eliminate all sharp edges that could chafe. Use rubber grommets when passing through compartment walls.*

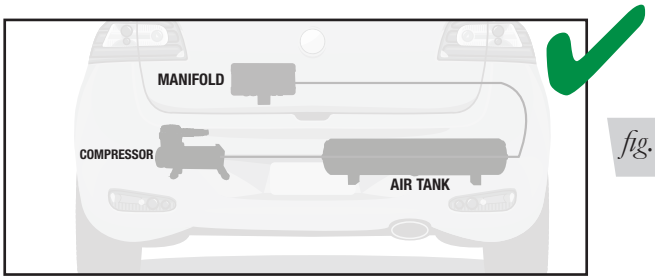


*fig. 1*

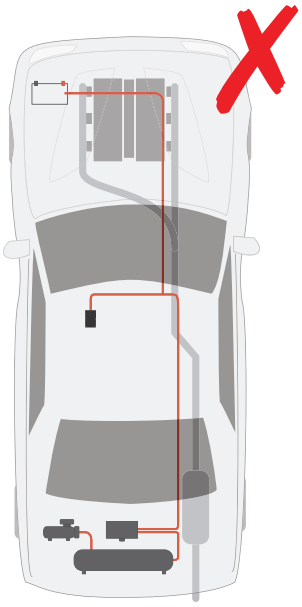

*fig. 2*

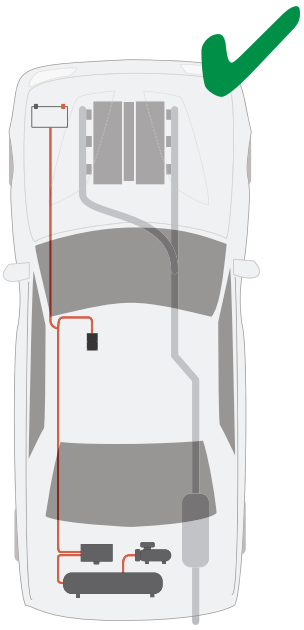

*fig. 3*

## TANK (OPTIONAL)

### *Tank pre-assembly*

1. Determine tank location and orientation prior to installing fittings.
2. Before installing fittings, apply liquid pipe sealant or Teflon tape (not supplied) around the male threads, leaving the first two threads uncovered.

**⚠ CAUTION**

NEVER BACK OFF AN INSTALLED PIPE FITTING TO ACHIEVE PROPER ALIGNMENT. LOOSENING INSTALLED PIPE FITTINGS WILL CORRUPT THE SEAL AND CONTRIBUTE TO LEAKAGE AND FAILURE.

3. Install the drain/fill PTC fitting in the tank's lowermost threaded port.
4. Choose a middle tank threaded port for manifold/filter air line.

### *Tank install*

1. Using the tank's feet as a template, drill holes for hardware assembly.
2. Secure the tank using the supplied hardware.
3. Route the drain/fill air line with the Schrader valve (included in the tank hardware pack) preferably outside the vehicle (fig. 4).
4. Install tee fitting and pressure-relief valve in-line to the drain fill line. Locate the pressure-relief valve inside the vehicle, if possible.

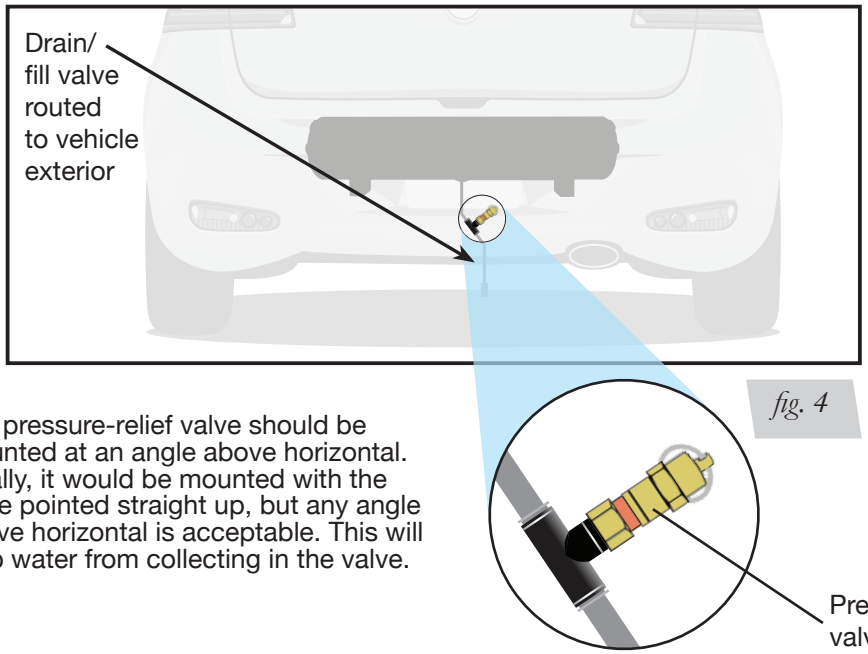


*fig. 4*

The pressure-relief valve should be mounted at an angle above horizontal. Ideally, it would be mounted with the valve pointed straight up, but any angle above horizontal is acceptable. This will stop water from collecting in the valve.

**⚠ CAUTION**

INSTALLATION OF THE PRESSURE-RELIEF VALVE IS IMPORTANT TO ENSURE THE SYSTEM IS NOT OVER-PRESSURIZED AS A RESULT OF A COMPRESSOR OR RELAY FAILURE.

*Table 1*

| Torque Specifications | | |
|---|---|---|
| Fitting Size | Turns Past Finger Tight | Torque ft./lbs. |
| 1/8" NPT | 1.5 - 3.0 | 12 |
| 1/4" NPT | 1.5 - 3.0 | 25 |
| 3/8" NPT | 1.5 - 3.0 | 40 |
| 1/2" NPT | 1.5 - 3.0 | 54 |

## FILTER

**⚠ CAUTION**

AIR COMPRESSORS TAKE IN MOISTURE (HUMIDITY) FROM THE OUTSIDE AIR SOURCE, AND WILL DEPOSIT THAT MOISTURE IN THE AIR TANK. THE AIR LIFT PERFORMANCE 3H/3P SYSTEM INCLUDES A FILTER THAT WILL GREATLY REDUCE THE POTENTIAL FOR MOISTURE TO ENTER THE MANIFOLD. HOWEVER, TANKS MUST BE REGULARLY PURGED TO ELIMINATE THE POSSIBILITY OF WATER ENTERING THE MANIFOLD. BE SURE TO PROVIDE EASY ACCESS TO DRAIN/FILL VALVE (PREFERABLY OUTSIDE THE VEHICLE). IF USING AN ENGINE-DRIVEN COMPRESSOR, AN ADDITIONAL COALESCING FILTER MUST BE USED. OTHERWISE THE LIFE OF THE PROVIDED FILTER MAY BE REDUCED DUE TO THE INCREASED POTENTIAL FOR OIL BEING INTRODUCED INTO THE SYSTEM.

1. Mount the filter to the tank using the appropriate fittings (fig. 5).

*fig. 5*

2. Ensure the filter is mounted in a vertical position. Do not install filter inverted or angled. (fig. 6).

*fig. 6*

3. The arrow on the filter indicates flow direction and must point toward the manifold. (fig. 7)

*fig. 7*

4. If choosing not to mount the filter to the tank, run necessary hose from tank to the filter and filter to the manifold using the appropriate fittings.
5. Run hose from bottom of filter to location where water will drain (fig. 8).

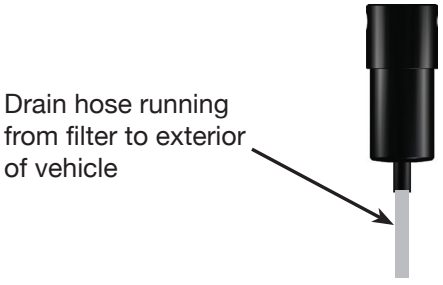


*fig. 8*

## INSTALL HARNESS

The harness can be routed inside or underneath the vehicle. In either case, ensure all parts of the harness are protected from abrasive edges and heat sources.

**⚠ CAUTION** DISCONNECT THE BATTERY GROUND BEFORE INSTALLING THE SYSTEM.

**⚠ CAUTION** REMOVE ALL FUSES WHEN JUMP-STARTING OR WELDING ON THE VEHICLE. FAILURE TO DO SO COULD DAMAGE THE MANIFOLD.

1. Manifold/relay/compressor connections
   - Attach the manifold connector; it will “click” into place once fully seated.
   - Mount the compressor relay using supplied hardware.
   - Cut off the spade and eyelet from the compressor power (red) and ground (black) wires.
   - Attach the compressor (red) wire to the main harness compressor power (red/white) wire using supplied heat shrinkable butt splice.
   - Attach the compressor (black) wire to the main harness compressor ground (black) wire using supplied heat shrinkable butt splice.

2. Battery/ignition connections
   - Route battery power (red) and ground (black) wires of the main harness to the battery.
   - Attach the battery power (red) wire to the red wire of the fuse holder using supplied heat shrinkable butt splice.
   - Attach supplied ring terminal to the other end of the fuse holder and fasten to the positive battery (+) terminal or stud.
   - Install a 30A fuse into this fuse holder and close the cap.
   - Attach the other ring terminal to the ground (black) wire and fasten to the negative battery (-) terminal or stud.
   - Route the ignition (pink) wire to a key-switched ignition source that remains on during cranking. Examples include: ECU, fuel pump.

**NOTE** *Do not select an accessory source. With the system fully installed, if the display shuts off while starting the vehicle, this is not a true ignition source.*

   - Attach the pink ignition wire to the black wire of the fuse holder.
   - Attach a faston terminal to the other end of the fuse holder and attach to a selected ignition source using a supplied fuse tap.
   - Install a 3A fuse into this fuse holder and close the cap.

**NOTE** *The supplied harness is only capable of powering a single compressor. If installing dual compressors, a second dedicated power wire is required. Contact an AIR LIFT PERFORMANCE retailer to purchase the optional second compressor harness kit (part number: 27703).*

3. Display
   - Route the main harness display cable as desired to the preferred operating location.
   - Attach the 4' display cable to the main harness cable, and to the back of the display.
4. Height sensor harness (optional)
   - Route and attach each height sensor harness to the height sensor locations based on the heat shrink labels for the appropriate corners of the vehicle (FL, FR, RL, RR)*.
   - Connect the main harness height sensor drops to the appropriate height sensor harness feeding the corresponding corners of the vehicle (match FL, FR, RL, RR)*.
5. Reconnect the battery once the system is completely installed.

**NOTE**

*Keep proper drip loops and use proper bend radius for wire bundles (fig. 9).*

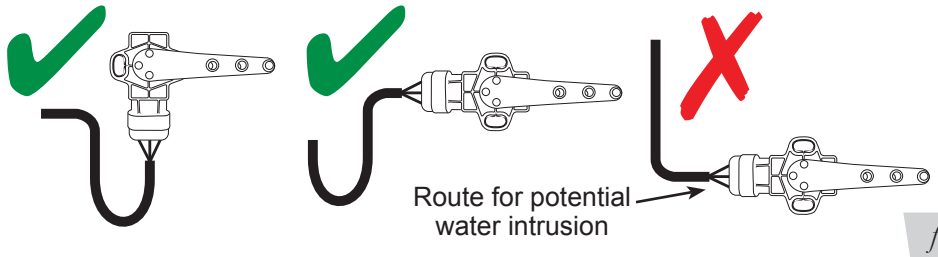


*fig. 9*

* FL = Front left corner
FR = Front right corner
RL = Rear left corner
RR = Rear right corner

## INSTALLING AIR LINES

1. Route and attach the air lines from the manifold to the air springs and from the manifold to the filter, as well as from the filter to the tank, if not mounting filter directly to tank.
   - Route air lines free from abrasive edges and heat sources.
2. Attach air lines to the appropriate manifold ports for the air springs, filter/tank and exhaust.

**NOTE**

*Air lines should be pushed in firmly, with a slight back-and-forth rotational twist – check the connection by pulling on each line to verify a robust connection.*

3. Exhaust port can be left open, or routed to preferred exhaust location. Routing exhaust outside of vehicle will eliminate any possibility of moisture being discharged from the port to surrounding area.

**NOTE**

*Use the included hose cutter (Part number: 10530). Cut all hose ends as squarely and as smooth as possible (fig. 10).*

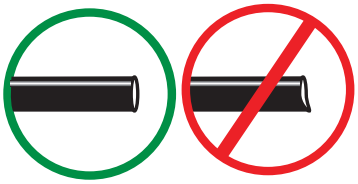


*fig. 10*

**NOTE**

*To release the air line from the connection (fig. 11), first release all air from the system. Push on the line (step 1), depressing the ring towards the fitting (step 2), and then pull the hose out of the fitting (step 3).*

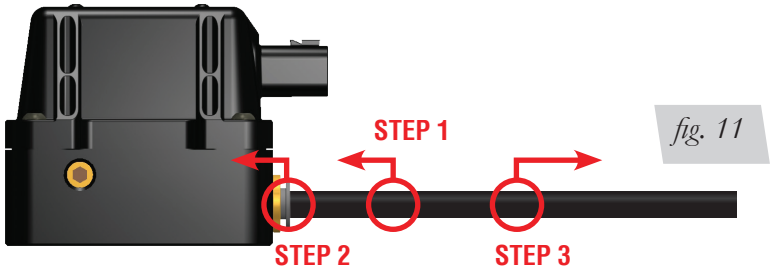


*fig. 11*

## HELPFUL AIR LINE TIPS

4. Minimum hose bend radius
   - 3/8” hose = 1.5” hose bend radius.
   - 1/4” hose = 1” hose bend radius.
5. Hose to fitting
   - No side loading on fitting from hose.
   - Hose straight for 1” before bending.
6. Hose cutting
   - Cut hose perpendicular to hose length.
   - Inspect hose for scratches that run lengthwise on hose prior to insertion.
   - Use the included hose cutter.

## MANIFOLD

**⚠ CAUTION**

BEST PRACTICE IS TO LOCATE THE MANIFOLD UNIT INSIDE THE VEHICLE. IF EXTERNAL MOUNTING IS DESIRED, THE MANIFOLD SHOULD BE LOCATED IN AN AREA SHIELDED FROM DIRECT WATER SPRAY FROM TIRES OR CAR WASHES.

1. Position the manifold in a desired location. Make sure the manifold mounting surface is flat.

**NOTE**

*When mounting the manifold , do so either horizontally or vertically, with ports and connector facing toward the ground. Do not mount the manifold upside down. Proper manifold mounting will help prevent water from settling in areas sensitive to freezing (fig. 12).*

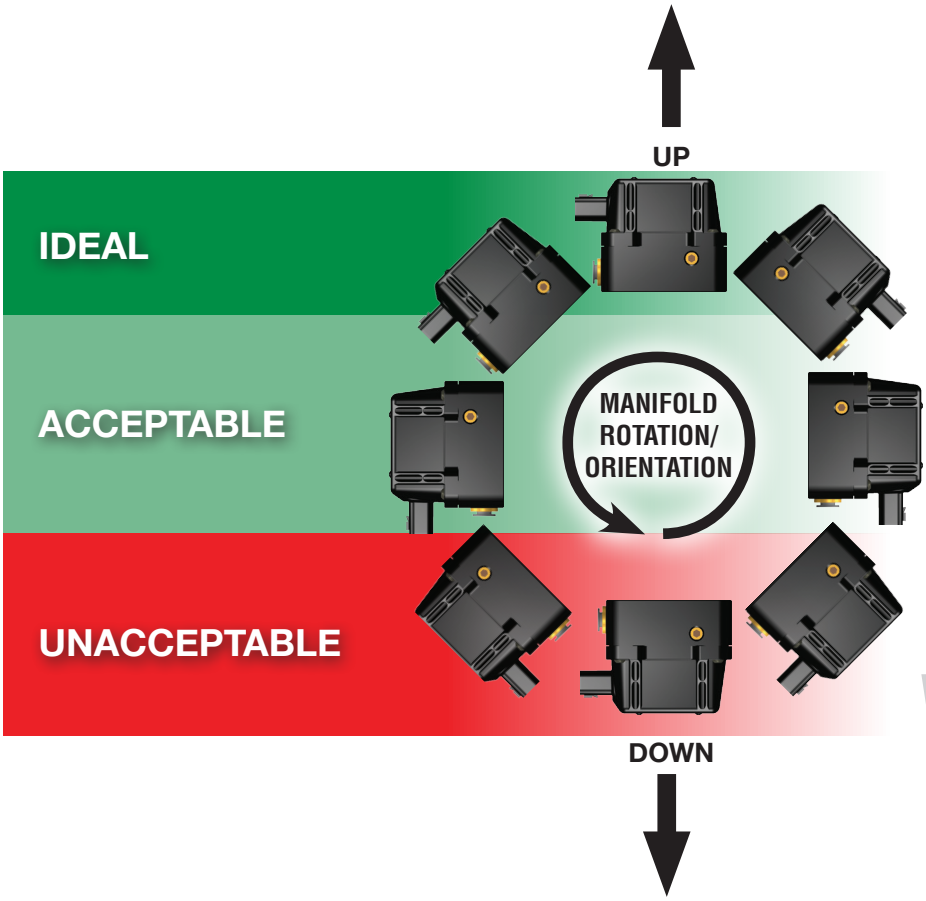


*fig. 12*

2. Fasten the manifold using the supplied hardware. If the mounting surface is not flat, add washers or a spacer to lift the manifold up over surface irregularities (fig. 13). In addition to the provided self-tapping screws, the manifold mounting holes are threaded and can be secured with 5/16-18 bolts (also supplied).

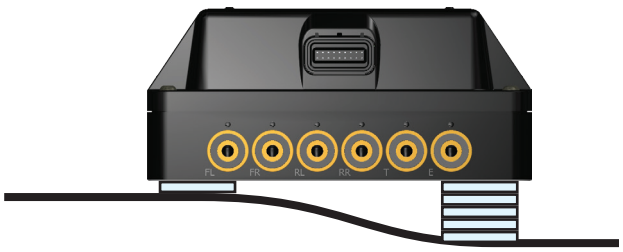

*fig. 13*

3. A manifold mounting template can be found on page 27.

## COMPRESSOR (OPTIONAL)

1. Prepare the compressor intake. If it is mounted inside the vehicle, attach the filter to port on end of compressor (fig. 14). If the compressor is located outside the vehicle, snorkel the inlet filter to dry location inside vehicle using components supplied with compressor (fig. 15).
2. Center-punch and drill four holes using the compressor or the template on page 29.
3. Secure the compressor using the supplied hardware (see installation diagram).

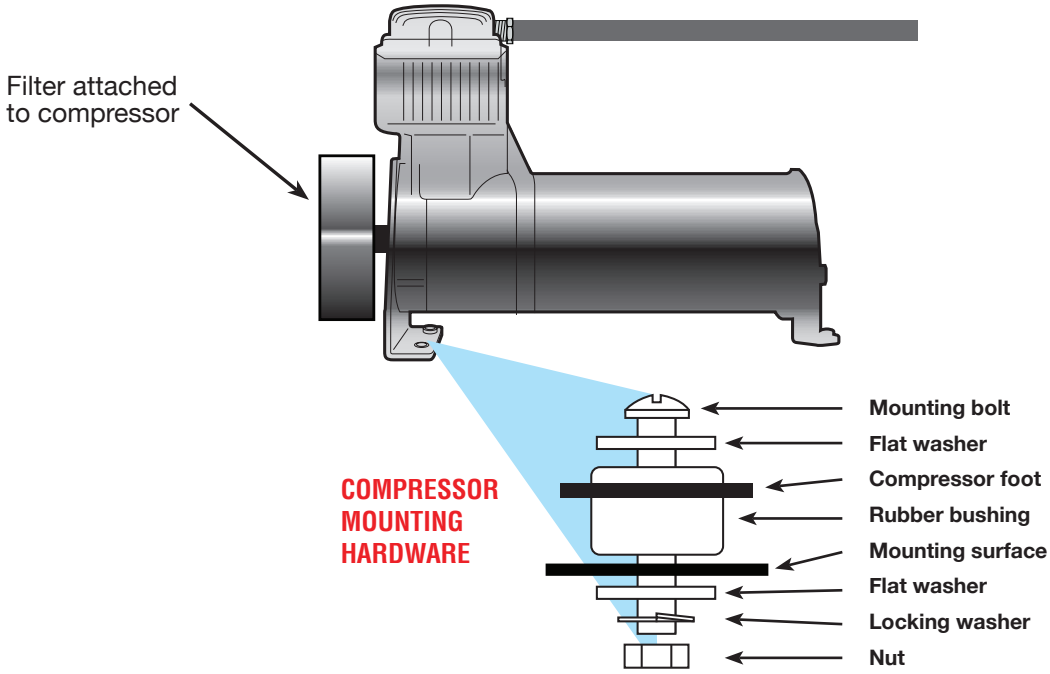


*fig. 14*

**NOTE**

*NOTE: If using an Air-Zenith compressor see figure 33 on Page 21.*

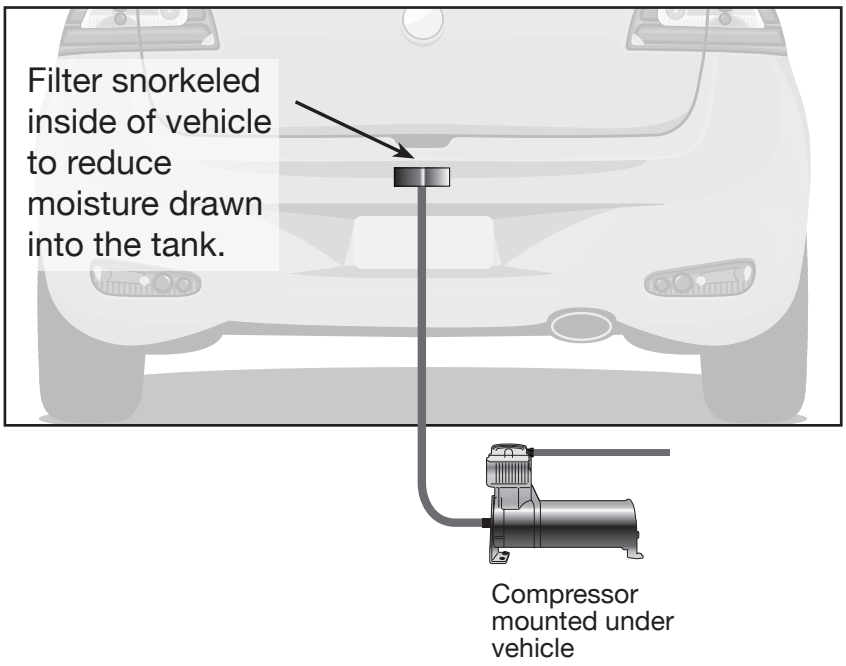


*fig. 15*

**⚠ WARNING** IF THE PRESSURE-BASED SYSTEM IS ALREADY INSTALLED BEFORE HEIGHT SENSOR INSTALLATION, MAKE SURE TO TURN OFF RISE ON START TO AVOID UNINTENDED AIRING UP. (SEE USER GUIDE.)

## HEIGHT SENSORS

Installation of height sensors is a trial-and-error process and requires patience. The goal is to use as much of the sensor range as possible which will maximize height adjustment accuracy.

### Determininig Height Sensor Mounting Point

1. Solid mounting point on the body or frame that will not deflect. Anything that moves is not a good mounting point.
2. The sensor can be mounted in any direction and will still work as long as the sensor arm base's extruded point is pointing toward the connector when the sensor arm is at its mid-position. The height sensor assembly is supplied in position A. Remove the arm to reposition it to B or C but keep the extruded point in the direction of the connector. The orientation of the connector must be either facing down or parallel to the ground to avoid water accumulating on the connector and making its way into the sensor. Also mount the sensor where the arm will be mounted opposite or 90 degrees from the connector wiring if possible. If not possible, ensure the wiring harness is secured away from arm travel so it will not get caught up when the arm cycles (fig. 16).

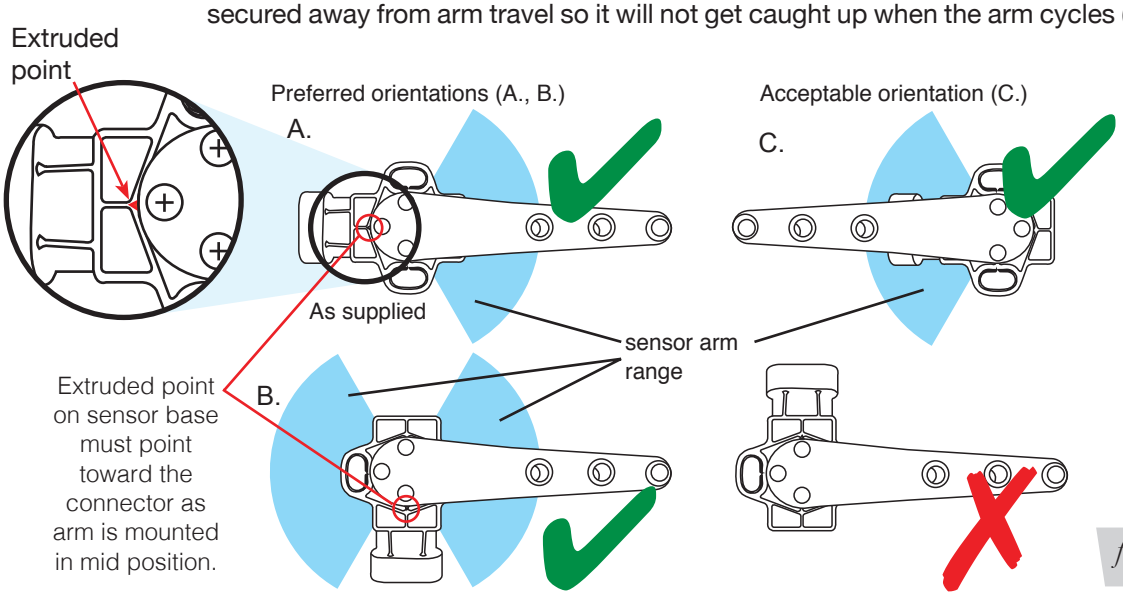


*fig. 16*

**NOTE** *Do **NOT** position sensor with connector up, or with point on sensor base pointed anywhere but at the sensor connector when arm is in its mid position.*

3. Find a point where the sensor will be directly above the lower linkage mounting surface. It may be necessary in some applications to fabricate a bracket to locate sensor in appropriate position.
4. Make sure that the sensor and sensor arm clear the vehicles suspension, wheels, and any other moving parts. This includes steering the wheels all the way to the lock position left and right to ensure proper clearance. Provide enough clearance to compensate for heavy load/movement that can't be seen from manual/physical articulations.
5. Keep the sensor and wires away from heat sources and moving parts that will create wear and may damage these components.
6. Understand whether the suspension or wheel assembly is the limiting factor when the vehicle is aired out. This will ensure proper accommodation of sensor arm travel.
7. If using self-tapping screws into the frame, make sure there are no wires or brake/air/fuel lines on the other side before installing screw.

**⚠ WARNING** FLOOR JACKS CAN BE DANGEROUS. WHENEVER USING A FLOOR JACK, MAKE SURE IT IS RATED FOR THE LOAD IT IS LIFTING. CHECK THE VEHICLE OWNER'S MANUAL FOR INFORMATION ABOUT WHERE TO PLACE THE JACK. BEFORE RAISING THE VEHICLE, PLACE WHEEL CHOCKS IN FRONT AND BEHIND THE WHEELS TO PREVENT THE VEHICLE FROM ROLLING. ALWAYS USE JACK STANDS TO SUPPORT THE VEHICLE. NEVER GET UNDER OR PLACE ANY BODY PARTS UNDER A VEHICLE THAT IS SOLELY SUPPORTED BY THE JACK.

### SELECTING SENSOR LOCATION

1. Mark on the vehicle the intended sensor mount location to maintain consistency in measuring methods in the next several steps. After finding a potential sensor location, measure the suspension travel, which will determine the proper arm hole. Exhaust the air springs, disconnect the air lines and jack up the suspension to its lower limit position. Take the measurement between the selected sensor arm hole with the arm at its midpoint and directly below the intended lower linkage location (fig. 17).

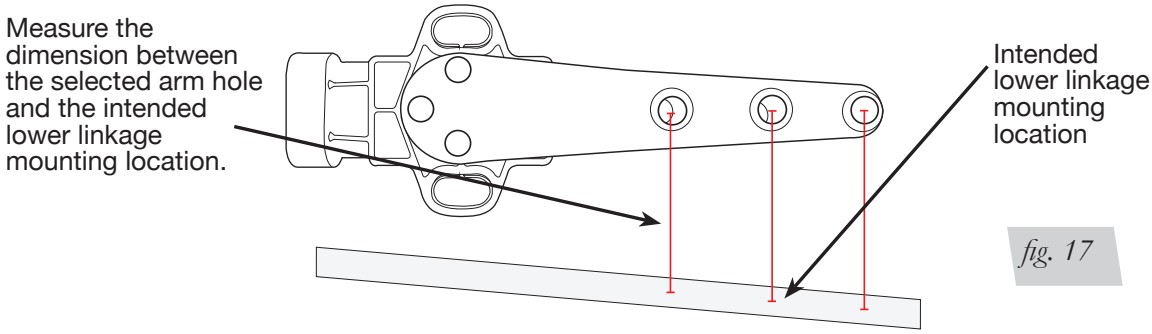


*fig. 17*

2. Reinstall air lines and cycle the suspension to get to the upper limit position again, measuring between the sensor arm's middle position and directly below the sensor arm hole mounting to the lower linkage ball joint (fig. 18). The difference between these two values will be the full suspension travel range.

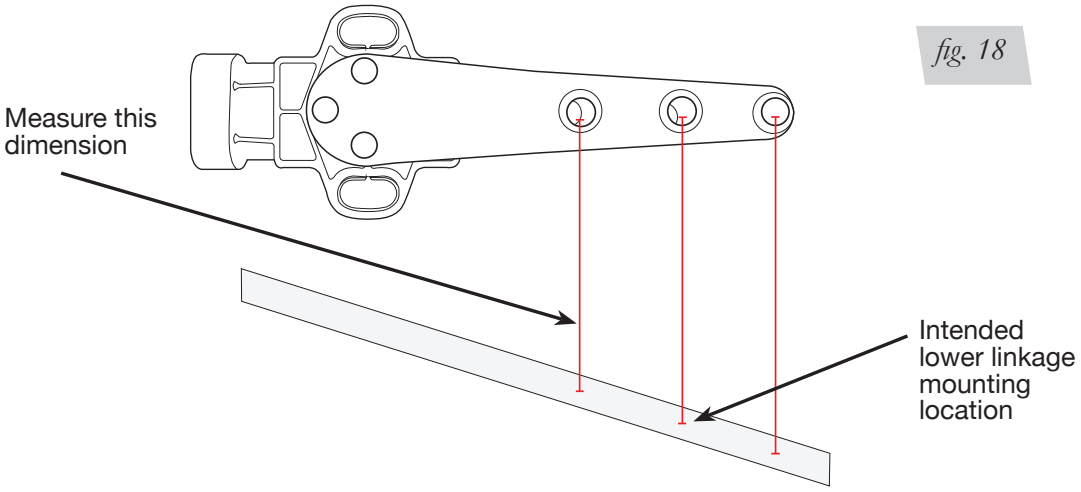


*fig. 18*

## SELECTING SENSOR ARM HOLE

Max angle of travel for this sensor is 120 degrees, which can be correlated to the necessary suspension travel as seen in the table below (table 2). Any significant over-extension or over-compression may damage and possibly destroy the sensor or sensor linkage.

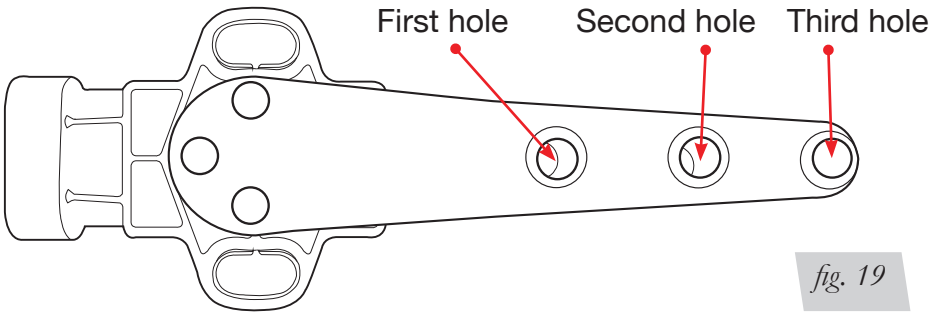


*fig. 19*

| Hole | Maximum Suspension Range | Minimum Suspension Range |
|---|---|---|
| First | 2 3/4" | 1 13/16" |
| Second | 4 3/16" | 2 7/8" |
| Third | 5 5/8" | 4 3/16" |

*Table 2*

The sensor should be mounted so the measured travel falls near one of the maximum suspension range dimensions. Move the sensor closer or farther from the suspension pivot point to achieve this measurement. (fig. 20).

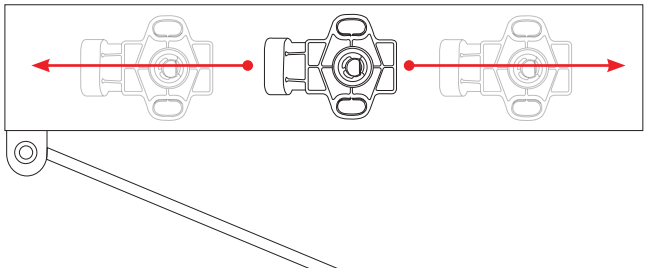

*fig. 20*

## MODIFYING LINKAGE ANGLE

After selecting the location of the sensor and the arm hole to be used, determine the lower mounting point. Ensure the angle between the mounting point and the sensor arm is less than 15 degrees. Any more angle than that, will put unwanted stress on the components. Use the supplied spacer on the lower mounting point to get the angle closer to vertical with respect to the sensor arm (fig. 21).

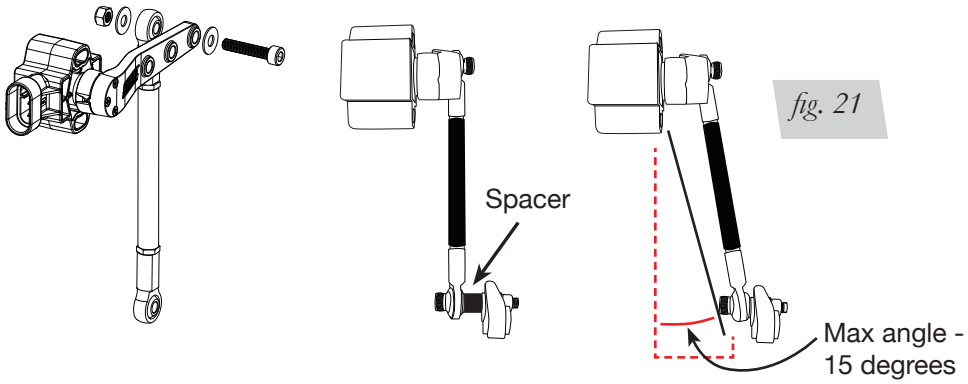


*fig. 21*

## LINKAGE ASSEMBLY/MODIFICATION

1. Locate the linkage and ensure the rod is threaded all the way on (fig. 22).

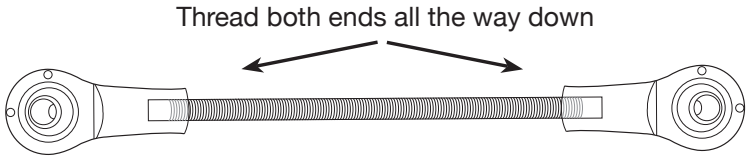


*fig. 22*

2. Next put the suspension in the mid-position with respect to full suspension travel (fig. 23).

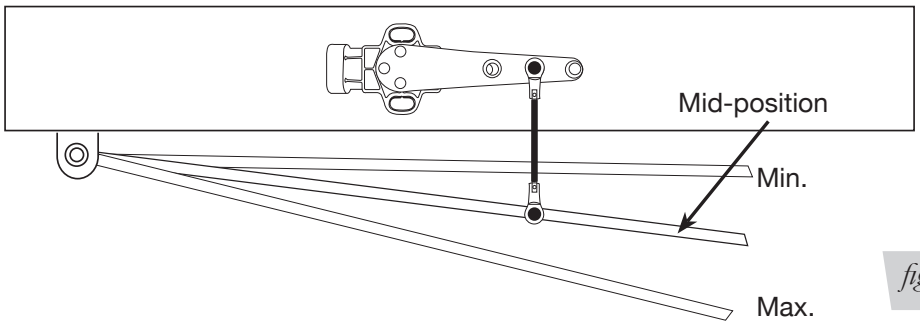


*fig. 23*

3. Fasten by finger tightening the linkage to the sensor arm and ensure the sensor arm is at mid-position with respect to the sensor (fig. 24).

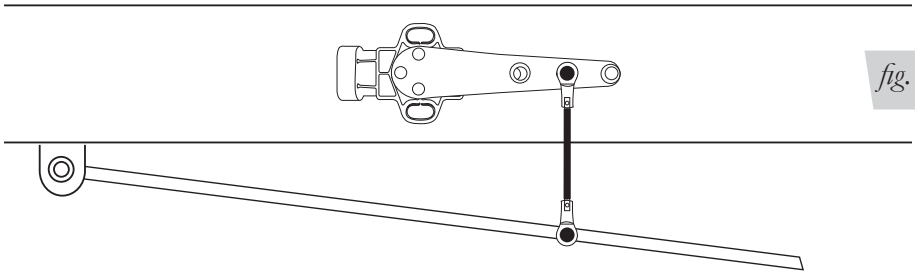

*fig. 24*

4. Loosen if needed in order to extend to reach the lower mounting point. If loosening the linkage to extend it is required, make sure to have at least 5 threads of engagement on both ends (fig. 25).

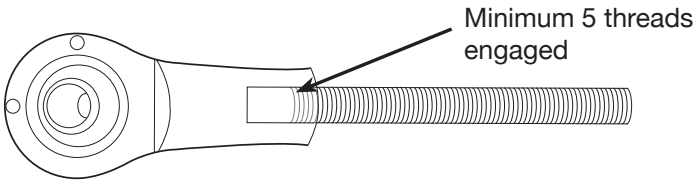


*fig. 25*

5. If shortening the rod linkage is necessary, mark the rod cover where the mounting location intersects with the intended mounting location (fig. 26).

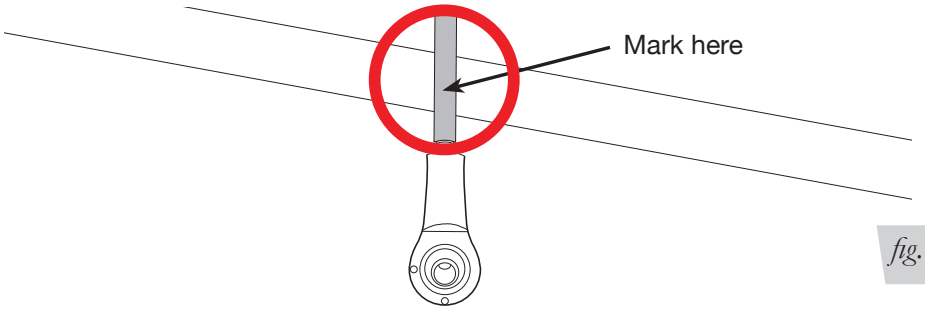


*fig. 26*

**CONTINUED ON PAGE 18**

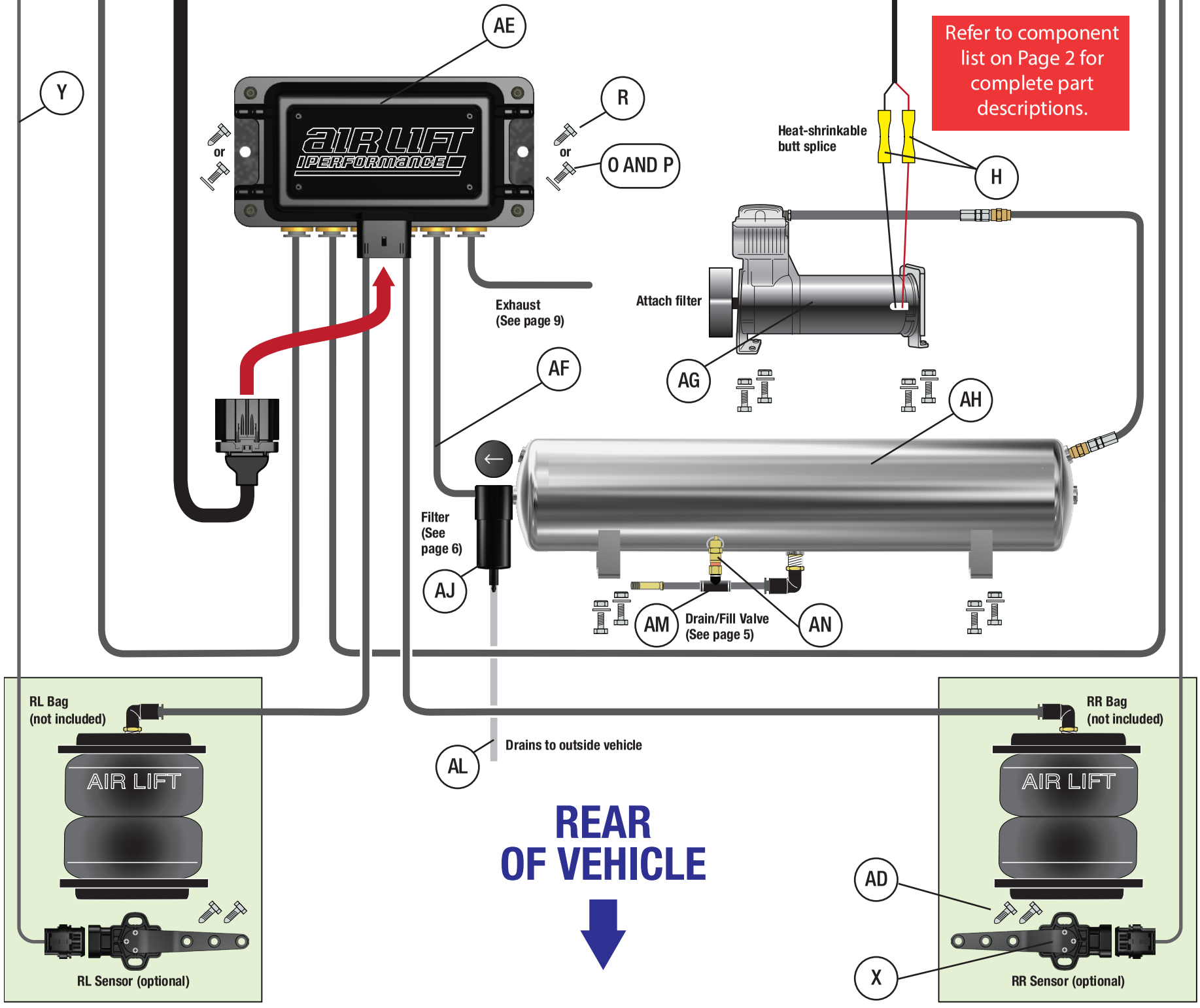
Refer to component list on Page 2 for complete part descriptions.
AE
Y
R
or
or
O AND P
Heat-shrinkable butt splice
H
Exhaust
(See page 9)
Attach filter
AG
AF
AH
Filter
(See page 6)
AJ
AM
Drain/Fill Valve
(See page 5)
AN
RL Bag
(not included)
AIR LIFT
RL Sensor (optional)
AL
Drains to outside vehicle
REAR
OF VEHICLE
RR Bag
(not included)
AIR LIFT
AD
X
RR Sensor (optional)

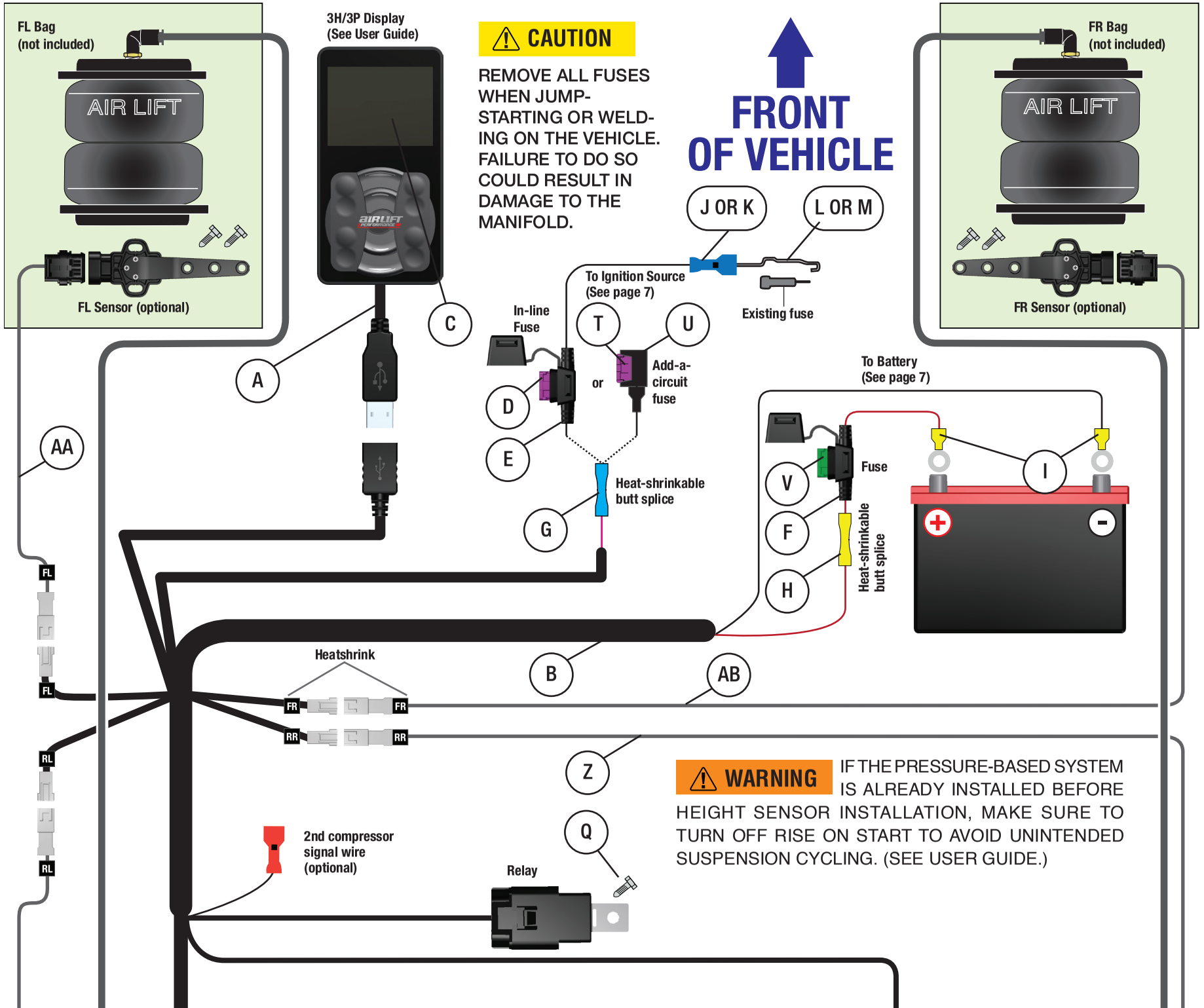
FL Bag
(not included)
AIR LIFT
FL Sensor (optional)
3H/3P Display
(See User Guide)
C
A
AA
CAUTION
REMOVE ALL FUSES WHEN JUMP-STARTING OR WELDING ON THE VEHICLE. FAILURE TO DO SO COULD RESULT IN DAMAGE TO THE MANIFOLD.
FRONT OF VEHICLE
J OR K
L OR M
To Ignition Source
(See page 7)
Existing fuse
In-line Fuse
T
U
D
or
Add-a-circuit fuse
E
G
Heat-shrinkable butt splice
FR Bag
(not included)
AIR LIFT
FR Sensor (optional)
To Battery
(See page 7)
V
Fuse
F
H
Heat-shrinkable butt splice
I
FL
RL
Heatshrink
FR
RR
B
AB
Z
Q
2nd compressor signal wire (optional)
Relay
WARNING
IF THE PRESSURE-BASED SYSTEM IS ALREADY INSTALLED BEFORE HEIGHT SENSOR INSTALLATION, MAKE SURE TO TURN OFF RISE ON START TO AVOID UNINTENDED SUSPENSION CYCLING. (SEE USER GUIDE.)

## HEIGHT SENSORS, CONT. FROM PAGE 15

6. Remove the rod linkage from the sensor arm and measure 1/2” back from the mark. This will show where to cut the rod (fig. 27).

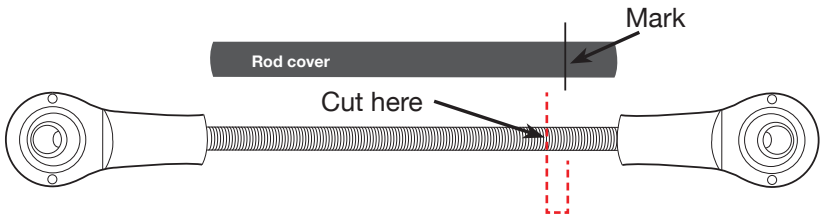


*fig. 27*

7. Before cutting the rod, thread the jam nut back on the rod. Use the nut to debur the rod end. (fig. 28).

*fig. 28*

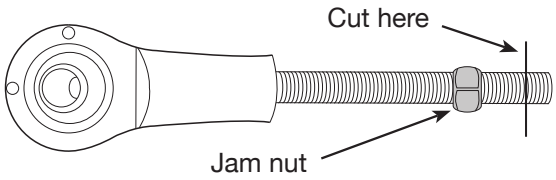


8. Cut the rod cover 5/8” shorter than the rod length with the rod assembled on one end after cutting (fig. 29).

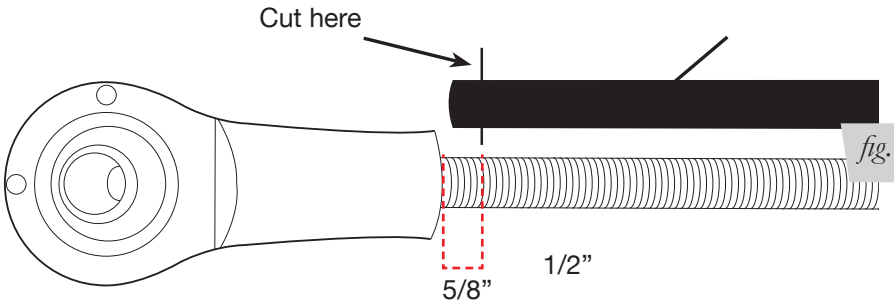


*fig. 29*

9. Assemble linkage back together, and fasten it to the sensor arm and lower mounting location with supplied hardware (fig. 30). Temporarily secure the sensor in its intended location including using the height sensor spacer that is provided.

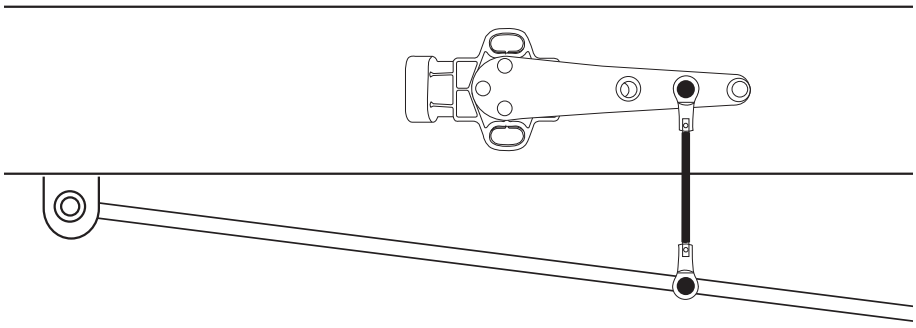

*fig. 30*

## VERIFYING SUSPENSION RANGE

Use the paper height sensor tool on page 25 or electronic sensor tool in the display to make sure the range is sufficient to provide accurate measurements (fig. 31). (See User's Guide).

Next, air the vehicle up and down to see if there is any issue with the travel of the sensor using the height sensor install tool.

After confirming that the range is correct and adequate, permanently secure the position of the sensor using the supplied hardware.

Complete this for all four sensors. Once the system is completely installed and system calibration is done, if any of the height sensors are out of range, there will be a warning message and the affected corner's visual indicators will not move with pressure adjustments. See User's Guide for more information.

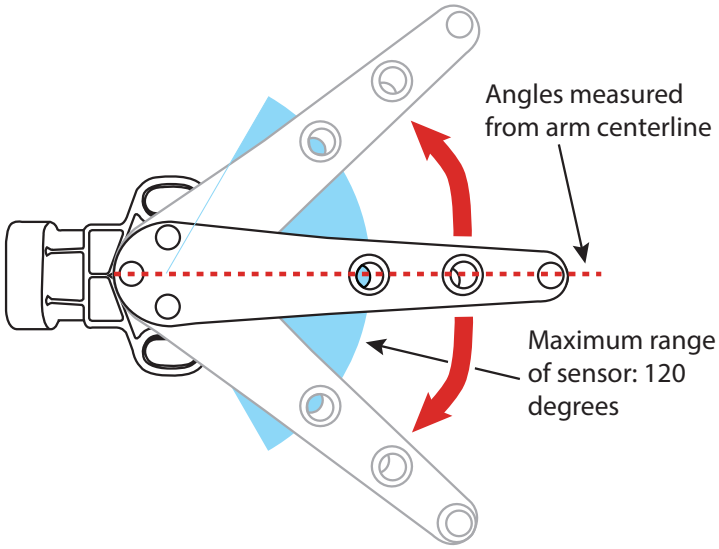


*fig. 31*

## MODIFYING SENSOR ARM

Follow the arcs around the appropriate holes to make the arms shorter. Keep the smooth, rounded contour of the end of the arm (fig. 32).

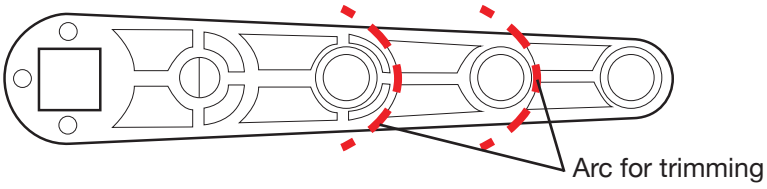


*fig. 32*

# Troubleshooting Guide

For technical assistance please contact our customer service department by calling (800) 248-0892, Monday through Friday. For calls from outside the USA or Canada, call (517) 322-2144 or email techsupport@airliftcompany.com.

| PROBLEM | CAUSE | SOLUTION |
|---|---|---|
| *Compressor doesn't run.* | Check for a blown fuse, bad relay, poor ground, or poor electrical connections or the motor overheated. | Replace the 30A or 3A fuse if blown. Check ground wire connection at battery and compressor. Let compressor cool off for about 30 minutes to allow thermal overload switch to reset. |
| *Compressor runs all the time.* | The compressor relay is defective or there is a leak. | Replace the relay or locate the leak and repair. |
| *Air spring or tank leak.* | Fitting seal or air line is compromised. | Check to make sure air lines are seated in connectors. Inspect fittings with soapy water. Trim hose or re-seal fitting. Ensure lines are cut straight. |
| *Nothing happens when the vehicle is key on, ignition active.* | Check for a blown fuse or a poor connection. | Replace the fuses and check the electrical connections. |
| *Compressors runs all the time but doesn't fill the tank.* | Compressor in-line check valve fitting has been overtorqued. | Loosen fitting and check again. Replace if needed. |
| *Display does not work.* | Check for a blown fuse, compromised cable/harness. | Replace the 3A fuse if blown. Replace the extension cable. |

# Leak Testing and Detection

1. A leak can be defined as a loss of pressure of more than 5 PSI over an 8-hour period. Be aware that ambient temperature change has an effect on pressure that may seem like a leak. For example: a change of 10 degrees F up or down from your baseline will have an approximate gain or loss of indicated pressure of 2 PSI. If a leak is suspected after including any temperature change, proceed to step 2.
2. Spray soapy water (1/5 Dawn brand dish soap to 4/5 water) on suspect fittings and hose connections and look for any bubbling caused by air leakage.
3. Fix leaking connection (review page 9 for help on NPT fittings and air line connections).
4. Wipe down sprayed connections with rag to remove any residual soapy water.

**NOTE** *Dawn® brand dish soap will not corrode the metals (aluminum, brass, steel) with which it comes into contact.*

# Permissible Modifications

1. If extending the height sensor harness is necessary because of the size of the vehicle, order one of two kits:
   a. 27700 Kit-Height Sensor 4' Ext (2 extension harnesses)
   b. 27701 Kit-Height Sensor 8' Ext (2 extension harnesses)
2. If it is necessary to extend the display cable beyond the 4-foot cable that is supplied, purchase a USB A/M adapter extension of up to 8 feet. Use an off-the-shelf USB 3.0 cable if possible.
3. If using an Air-Zenith OB2 compressor, follow the wiring diagram below (fig. 33). The 70A fuse, relay, etc. are supplied with compressor. Wiring requirements for the compressor should follow manufacturer's recommendation.

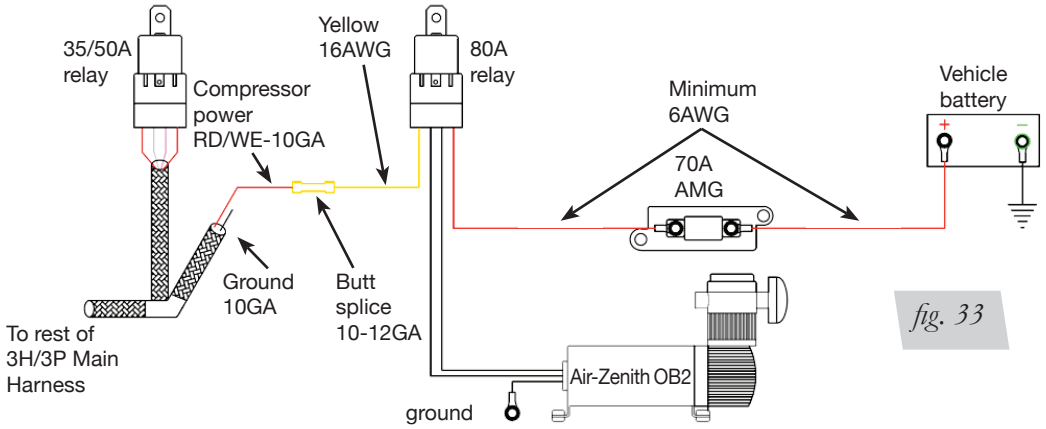


*fig. 33*

# Permissible Modifications, Cont.

4. The keypad on the 3H/3P display can be rotated for horizontal applications but it must not be rotated so that the keypad is above the screen (fig. 34). It will not power up in this position.
   a. Rotate the keypad after removing the two screws on the back of the 3H/3P display unit (fig. 35). Once they are removed, the keypad can be pulled out and rotated.
   b. Using light and even pressure, push the keypad into the display until it is flush.
   c. After rotating the keypad, re-fasten the screws to the torque of 14-16 in.-oz. Do not overtighten.
   d. See the User Guide for additional information about display options.

*fig. 34*

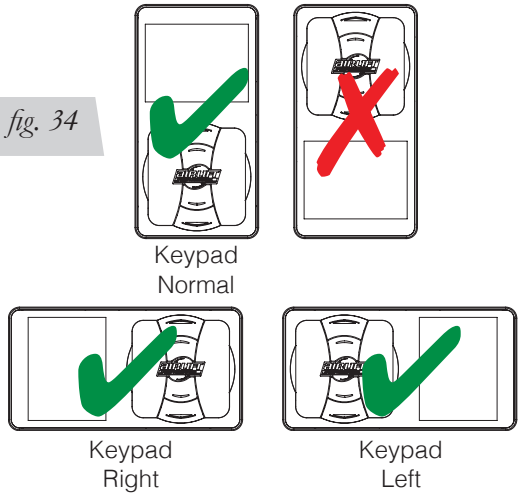


See Page 23 for a scale template for the 3H/3P display

*fig. 35*

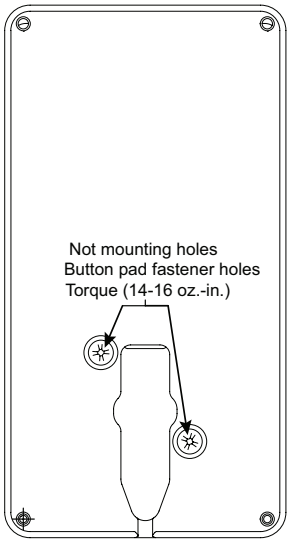


5. Extending the compressor power and ground wires is not recommended. It is permissible to remove a portion of the battery power and ground wires to extend the compressor wiring if necessary, keeping the same overall harness length. This will keep the voltage drop be within industry standards. Failing to do so could decrease the life of the compressor.

# Display Mounting Template

**⚠ CAUTION**

IMPORTANT: PRINT THIS MANUAL AT 100% SCALE. THIS MANUAL CONTAINS DRILLING TEMPLATES, WHICH WOULD BE RENDERED INCORRECT IN DIMENSION IF PRINTED WITH ANY SCALING. USING AN INCORRECT TEMPLATE TO DRILL HOLES MAY CAUSE DAMAGE TO YOUR VEHICLE.

REFER TO THE ONE-INCH SCALE (FIG. 36) AND USE A MEASURING TOOL TO CONFIRM THAT THE PRINTED SCALE MEASURES ONE INCH TO VERIFY PROPER SCALE. IF THIS IS PRINTED AT ANY SCALE OTHER THAN 100%, THE INSTALLER COULD END UP DRILLING IN THE WRONG LOCATIONS ON THE VEHICLE.

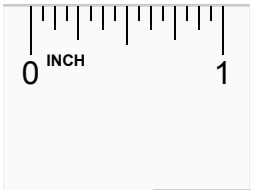


*fig. 36*

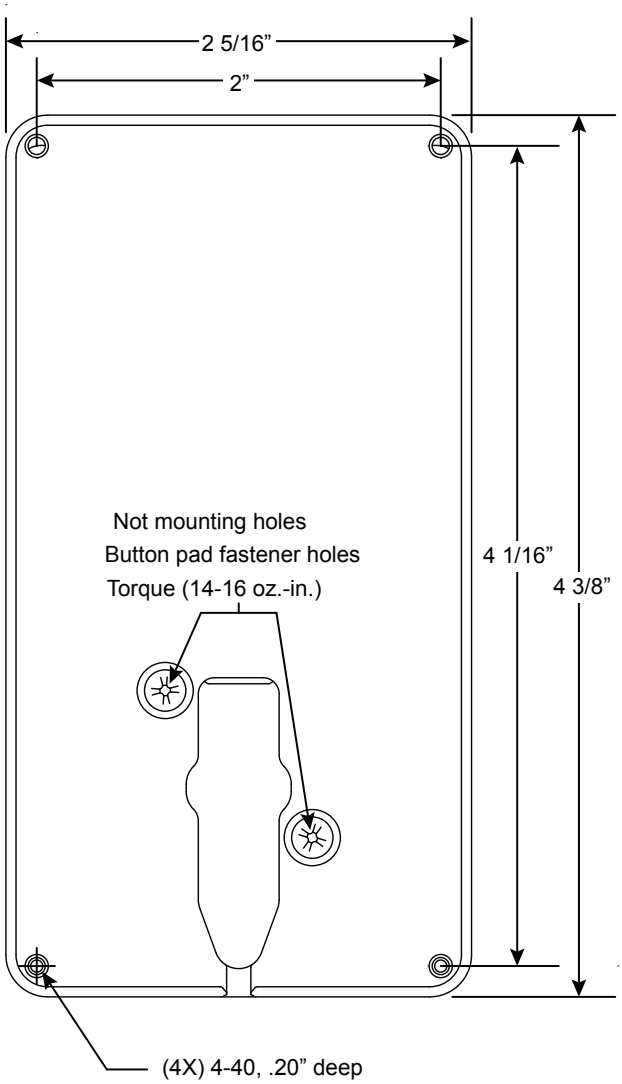

# Height Sensor Install Tool

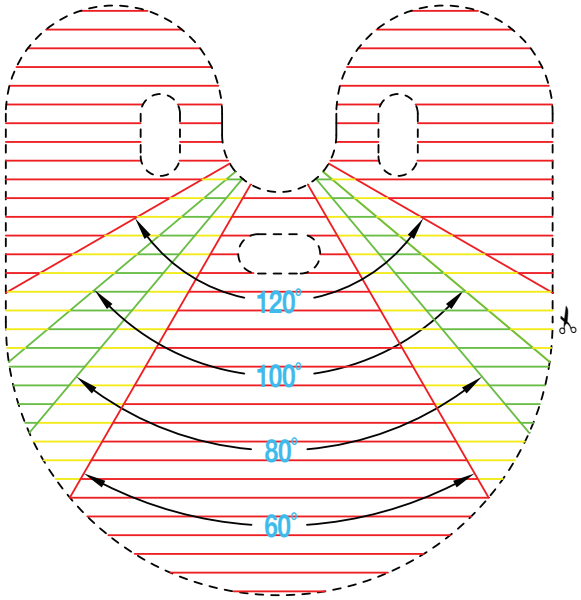


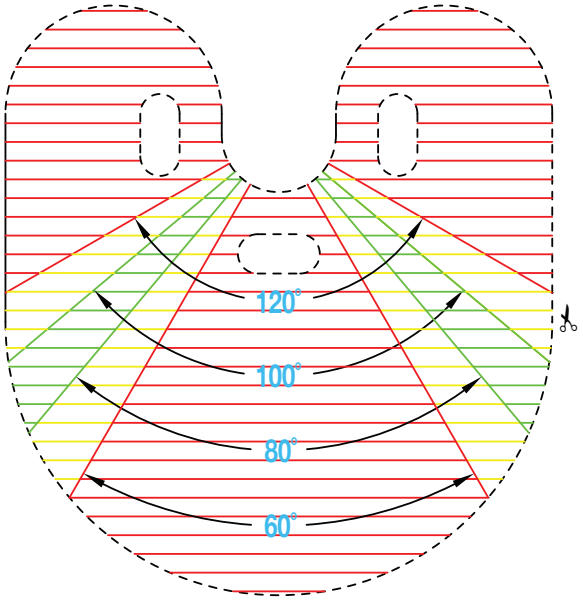


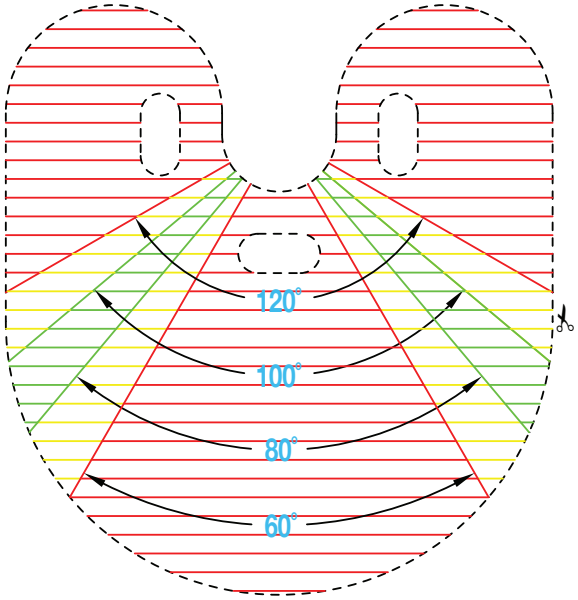


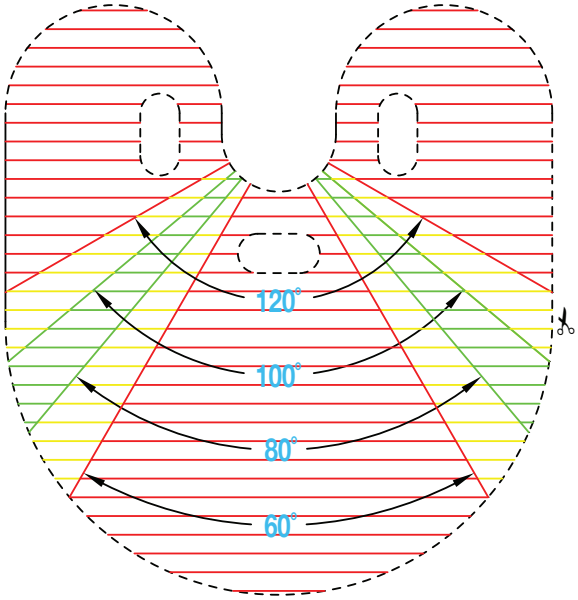


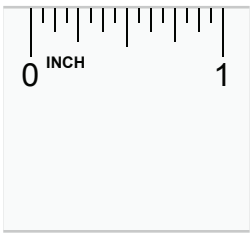


Cut out the height sensor tools and position each one as shown at right depending on the height sensor orientation. It would be a good idea to make copies of this page in case the tools are damaged during installation. Make sure to copy at 100% so the tools are the correct size. The drawing to the right is not to scale.

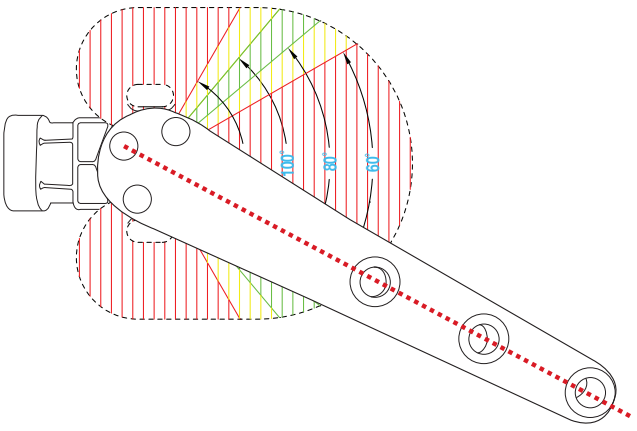

# Manifold Mounting Template

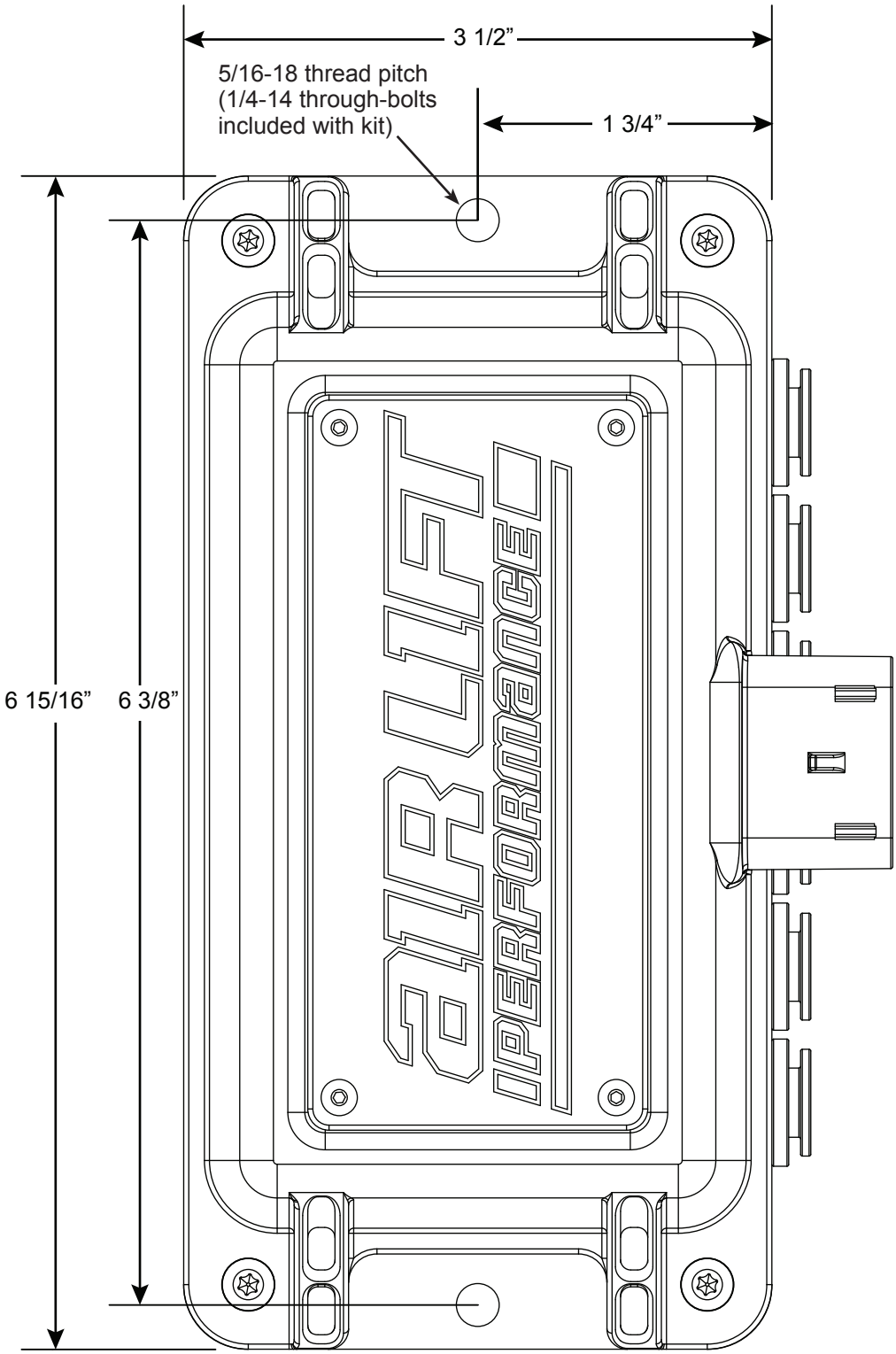

# 16444 Compressor Mounting Template

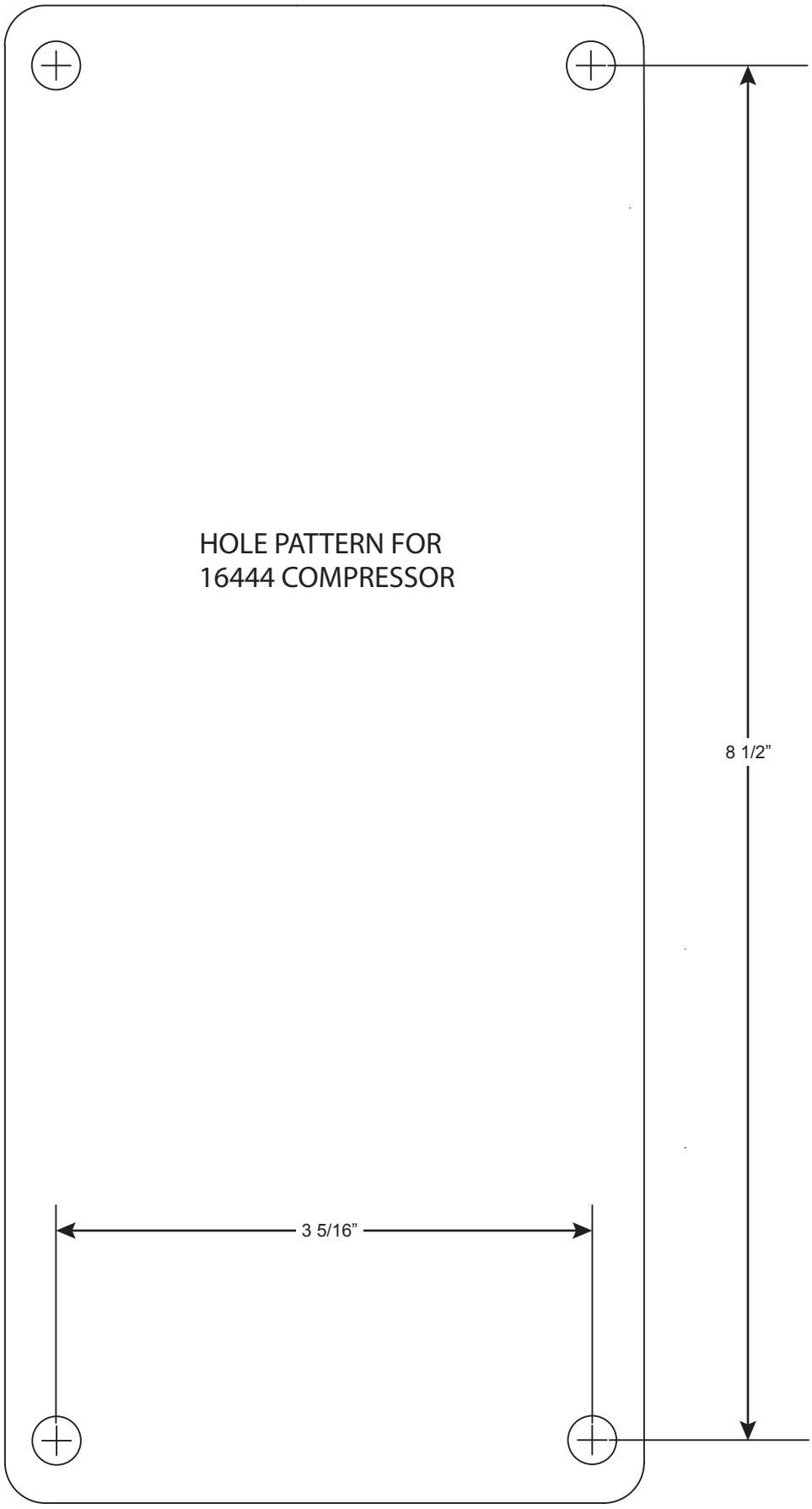

# Limited Warranty and Returns Policy

## WHAT THIS WARRANTY COVERS

Air Lift Company provides a Limited Lifetime Warranty to the original purchaser of its Air Lift Performance 3H ™ and 3P™ Control/Air Management Systems, that the Air Lift Performance products will be free from defects in workmanship and materials for the normal expected life of the part when used on cars and trucks as specified by Air Lift Company and under normal operating conditions, subject to the requirements and exclusions set forth below.

For all other Air Lift Performance products, Air Lift Company warrants to the original purchaser for a period of one year from the date of original purchase, that the Air Lift Performance products will be free from defects in workmanship and materials when used on cars and trucks as specified by Air Lift Company and under normal operating conditions, subject to the requirements and exclusions set forth below.

## WHAT THIS WARRANTY DOES NOT COVER

The warranty does not apply to products that have been improperly applied, improperly installed, or which have not been maintained in accordance with installation instructions furnished with all products. This warranty does not apply and is void if damage or failure is caused by: accident, abuse, misuse (including but not limited to racing or off-road activities or commercial use), abnormal use, faulty installation, liquid contact, fire, earthquake or other external cause; operating the product outside Air Lift Company's instructions, specifications or guidelines; or service, alteration, maintenance or repairs performed by anyone other than Air Lift Company to the product from its purchased condition. This warranty also does not apply to: Universal Air (Fabricator Kits), consumable parts, such as batteries; cosmetic damage, including but not limited to scratches or dents; defects caused by normal wear and tear or otherwise due to the normal aging of the product, or if any serial or identification number has been removed or defaced from the product. Air Lift Company reserves the right to change the design of any product without assuming any obligation to modify any product previously manufactured.

## LIMITATION OF LIABILITY

TO THE EXTENT PERMITTED BY LAW, THIS WARRANTY AND THE REMEDIES SET FORTH HEREIN ARE EXCLUSIVE AND IN LIEU OF ALL OTHER WARRANTIES, REMEDIES AND CONDITIONS, WHETHER ORAL, WRITTEN, STATUTORY, EXPRESS OR IMPLIED. AIR LIFT COMPANY DISCLAIMS ALL STATUTORY AND IMPLIED WARRANTIES, INCLUDING WITHOUT LIMITATION, WARRANTIES OF MERCHANTABILITY AND FITNESS FOR A PARTICULAR PURPOSE AND WARRANTIES AGAINST HIDDEN OR LATENT DEFECTS TO THE EXTENT PERMITTED BY LAW. TO THE EXTENT SUCH WARRANTIES CANNOT BE DISCLAIMED, SUCH IMPLIED WARRANTIES SHALL APPLY ONLY FOR THE WARRANTY PERIOD SPECIFIED ABOVE. PLEASE NOTE THAT SOME STATES DO NOT ALLOW LIMITATION ON HOW LONG AN IMPLIED WARRANTY (OR CONDITION) LASTS. SO THE ABOVE LIMITATION MAY NOT APPLY TO YOU.

EXCEPT AS PROVIDED IN THIS WARRANTY AND TO THE EXTENT PERMITTED BY LAW, AIR LIFT COMPANY SHALL NOT BE LIABLE FOR ANY DIRECT, SPECIAL, INCIDENTAL OR CONSEQUENTIAL DAMAGES RESULTING FROM ANY BREACH OF WARRANTY OR CONDITION, OR ARISING IN CONNECTION WITH THE SALE, USE OR REPAIR OF AIR LIFT PERFORMANCE PRODUCTS, OR UNDER ANY OTHER LEGAL THEORY, INCLUDING BUT NOT LIMITED TO LOSS OF USE, LOSS OF REVENUE, LOSS OF ACTUAL OR ANTICIPATED PROFITS, LOSS OF THE USE OF MONEY, LOSS OF BUSINESS, LOSS OF OPPORTUNITY, LOSS OF GOODWILL, AND LOSS OF REPUTATION. AIR LIFT COMPANY'S MAXIMUM LIABILITY SHALL NOT IN ANY CASE EXCEED THE PURCHASE PRICE PAID BY YOU FOR THE AIR LIFT PERFORMANCE PRODUCT. PLEASE NOTE THAT SOME STATES DO NOT ALLOW THE EXCLUSION OR LIMITATION OF INCIDENTAL OR CONSEQUENTIAL DAMAGES, SO THE ABOVE LIMITATION OR EXCLUSION MAY NOT APPLY TO YOU.

# Limited Warranty and Returns Policy, Cont.

## HOW TO GET SERVICE

If a defect in workmanship or materials causes your Air Lift Performance product to become inoperable within the warranty period, before returning any defective product, call Air Lift Company at (800) 248-0892 in the U.S. and Canada (elsewhere, (517) 322-2144) to obtain a Returned Materials Authorization (RMA) number. The consumer shall be responsible for removing (labor charges) the defective product from the vehicle and returning it, shipping costs prepaid, to Air Lift Company for verification. Returns to Air Lift Company must be postage prepaid and sent to: Air Lift Company • 2727 Snow Road • Lansing, MI • 48917. You must prove to the satisfaction of Air Lift Company the date of original purchase of your Air Lift Performance product. You must also enclose the RMA number and a return address. A minimum $10 shipping and handling charge will apply to all warranty claims. You must also pack the product to minimize the risk of it being damaged in transit. If we receive a product in damaged condition as the result of shipping, we will notify you and you must seek a claim with the shipper.

## WHAT AIR LIFT COMPANY WILL DO

If you submit a valid claim to Air Lift Company during the warranty period, Air Lift Company will, at its option, repair your Air Lift Performance product or furnish you with a new or rebuilt product. Air Lift Company will not reimburse you for repairs or replacement parts provided by other parties. Your repaired or replacement Air Lift Performance product will be returned to you (subject to payment of the required warranty claim shipping and handling charge) and it will be covered under the warranty for the balance of the warranty period, if any. When a product or part is replaced, any replacement item becomes your property and the replaced item becomes property of Air Lift Company. You are responsible for installation/reinstallation (labor charges) of the product.

## HOW THE LAW RELATES TO THIS WARRANTY

THIS WARRANTY GIVES YOU SPECIFIC LEGAL RIGHTS AND YOU MAY ALSO HAVE OTHER RIGHTS WHICH VARY FROM STATE TO STATE. BY THIS WARRANTY, AIR LIFT COMPANY DOES NOT LIMIT OR EXCLUDE YOUR RIGHTS EXCEPT AS ALLOWED BY LAW. TO FULLY UNDERSTAND YOUR RIGHTS, YOU SHOULD CONSULT THE LAWS OF YOUR STATE.

# Replacement Information

If replacement parts are needed, contact the local dealer or call Air Lift Company customer service at (800) 248-0892. Most parts are immediately available and can be shipped the same day.

**Contact Air Lift Company customer service at (800) 248-0892 or (517) 322-2144 first if:**

- Parts are missing from the kit.
- Technical assistance on installation or operation is needed.
- Broken or defective parts in the kit.
- Wrong parts in the kit.
- Have a warranty claim or question.

**Contact the retailer where the kit was purchased:**

- If it is necessary to return or exchange the kit for any reason.
- If there is a problem with shipping if shipped from the retailer.
- If there is a problem with the price.

# Contact Information

Contact Air Lift Company's customer service department by calling (800) 248-0892, Monday through Friday with questions, comments or for technical assistance. For calls from outside the USA or Canada, call (517) 322-2144. Contact customer service anytime at techsupport@airliftperformance.com.

For inquiries by mail, our address is P.O. Box 80167, Lansing, MI 48908-0167. The shipping address for returns is 2727 Snow Road, Lansing, MI 48917.

Contact the Air Lift Performance sales team anytime at sales@airliftperformance.com or visit www.airliftperformance.com.

## Need Help?

Contact Air Lift customer service department at (800) 248-0892, Monday through Friday. For calls from outside the USA or Canada, call (517) 322-2144.

*Thank you for purchasing Air Lift Performance products!*

Air Lift Company • 2727 Snow Road • Lansing, MI 48917 or P.O. Box 80167 • Lansing, MI 48908-0167
Toll Free (800) 248-0892 • Local (517) 322-2144 • Fax (517) 322-0240 • airliftperformance.com

Printed in
the USA

# Air Lift Performance 3H™/3P™

## Control System

P A T E N T E D

AIR LIFT PERFORMANCE™

# USER GUIDE

For maximum effectiveness and safety, please read these instructions completely before proceeding with installation.

*Failure to read these instructions can result in an incorrect installation.*

MN-948 • (011510) • ERN 7687

# Download the App for the Best #lifeonair

The Air Lift Performance 3 mobile app allows for full integration of your new 3H/3P control system on compatible mobile devices. Simply download the FREE app to not only take full control of your system, but to always have the latest system firmware with updates directly from the app.

Visit **air-lift.co/3app** to download.

See page 9 for instructions on pairing your device.

# TABLE OF CONTENTS

**Introduction** . . . . . .4
Important Safety Notices . . . . . 4

**Main Controls**. . . . . .5

**Quick Reference Guide** . . . . . .6

**Getting Started**. . . . . .7

**Display Menu** . . . . . .8

**Operation** . . . . . .9

**Setup Menu** . . . . . .10

**Calibration Menu** . . . . . .12

**Calibration Detail Explained** . . . . . .14

**Firmware Updates** . . . . . .16

**Additional Information** . . . . . .18

**About Menu** . . . . . .19

**System Messages** . . . . . .20

**VIAIR Duty Cycle/Working Pressure** . . . . . .22

# Introduction

The purpose of this publication is to assist with the calibration, maintenance, and troubleshooting of the Air Lift Performance 3P or 3H control systems.

Read the entire user guide before beginning calibration or performing any maintenance, service or repair. The information includes a step-by-step calibration set-up, display options and functions, and diagnostic troubleshooting.

Air Lift Company reserves the right to make changes and improvements to its Air Lift Performance products and publications at any time. For the latest version of this manual, contact Air Lift Company at (800) 248-0892 or visit www.airliftperformance.com.

## IMPORTANT SAFETY NOTICES

**⚠ WARNING** Before servicing the vehicle, make sure to turn off “rise on start” and “preset maintain.” This will eliminate any unintended suspension cycling if you need to turn the key on in the vehicle for any reason.

**⚠ WARNING** Only use the Air Lift Performance 3 App on a mobile device when the vehicle is in a clear line of sight. To avoid the risk of serious injury or harm, verify that no person or thing is near or in the way of the vehicle’s path of travel while cycling the suspension.

**⚠ WARNING** For user safety and to prevent vehicle damage, the system has a 25% or 25 PSI minimum drive height as the default. Due to extreme risk of danger to the user or vehicle, Air Lift Company strongly recommends not to change this value. If for some reason the minimum drive height is set below the default value, Air Lift Company suggests this setting only be used while the vehicle is stationary. It is possible to set the vehicle at a height that is below this threshold, then start driving. This is a universal system and settings will be different for every user and vehicle. The installer is responsible to determine how low the suspenion can be set without causing damage. It is the sole responsibility of the user, and Air Lift Company will not be held liable for, anything that may happen to the operator or the vehicle as a result of the user’s choice to alter these default values below recommended minimums.

**⚠ WARNING** Floor jacks can be dangerous. Whenever using a floor jack, make sure it is rated for the load it is lifting. Check the vehicle owner’s manual for information about where to place the jack. Before raising the vehicle, place wheel chocks in front and behind the wheels to prevent them from rolling. Always use jack stands to support the vehicle. Never get under or place any body parts under a vehicle that is solely supported by the jack.

# Main Controls

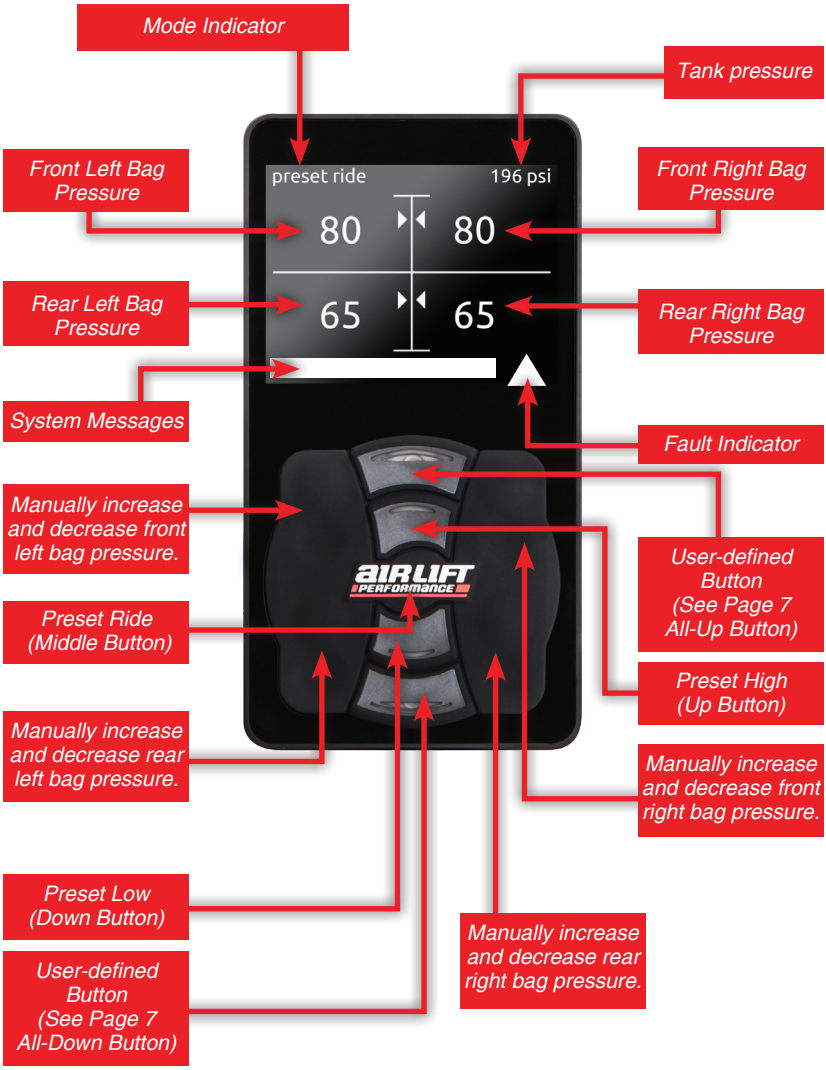

# Quick Reference Guide

| Main Menu Screen | Sub-Menu | Data | Default |
|---|---|---|---|
| Display | Brightness | Level 1-10 | Level 7 |
| | Brightness Sleeping | Level 1-10 | Level 4 |
| | Sleep Time | 5-60 Sec | 10 Sec |
| | All-Up Button | All-Up | All-Up |
| | | Front-Down | |
| | | Preset | |
| | All-Down Button | All-Down | Air-Out |
| | | Front-Up | |
| | | Preset | |
| | | Air-Out | |
| | Units | PSI | PSI |
| | | BAR | |
| Operation | Rise-on-Start | Off | Off |
| | | On | |
| | Pre-Set Maintain | Off | Off |
| | | On | |
| | Minimum Drive Height | 0-100 PSI (Pressure)<br>0-100% (Height) | 25 PSI / 25% |
| | Pressure/Height Mode | Height | Pressure |
| | | Pressure | |
| | Anti Cross-Load (Height) Axle Equalization (Pressure) | Off | On |
| | | On | |
| | Show Mode | Off | Off |
| | | On | |
| | Bluetooth Pairing | Off | Off |
| | | On | |
| Setup | Sensor Tool | See Page 10 | — |
| | Compressor | See Compressor Main Menu | — |
| | Min. Battery (Voltage to allow compressor to still run) | 10-15 Volts | 11 Volts |
| | Factory Reset | Cancel | Cancel |
| | | Reset All | |
| Compressor | On/Off | Off | Off |
| | | On | |
| | Enable/Disable | Enabled | Enabled |
| | | Disabled | |
| | Dual/Single | Single | Single |
| | | Dual | |
| | Max Pressure | 150-200 PSI | 150 PSI |
| | Duty Cycle | 33% | 50% |
| | | 50% | |
| | | 66% | |
| | | 75% | |
| | | 100% | |
| Calibration | Wizard | See Page 12 | — |

# Getting Started

This User Guide is designed to demonstrate all the different menu options and default settings that will help make using this system easy and enjoyable.

1. To get to the main menu screen, push the middle (preset ride) button simultaneously with either the up (preset high) button or down (preset low) button.
2. All other settings and parameters will be detailed in the following pages to ensure the system is set up accurately.
3. Use the preset low and preset high buttons to scroll.
4. Green text indicates the last saved value.

# Display

## BRIGHTNESS

Set the brightness for the display while in use.

1. Level 1-10
2. Use the up and down buttons to increase or decrease luminosity in 10% increments.
3. Level 7 (default)

## BRIGHTNESS SLEEPING

Set the brightness for the display after it goes into sleep mode.

1. Level 0-10
2. Use the up and down buttons to increase or decrease luminosity in 10% increments.
3. Level 4 (default)

## SLEEP TIME

Set the amount of time it takes to revert back to the main screen and for the display to go to sleep.

1. 5-60 seconds.
2. Use the up and down buttons to increase or decrease time in 1-second increments.
3. 10 seconds (default)

## ALL-UP BUTTON

Set function for the all-up button.

1. All-up (default)
2. Front-up
3. Preset

## ALL-DOWN BUTTON

Set function for the all-down button.

1. All-down
2. Front-down
3. Preset
4. Air-out (default)

## UNITS

Set units of measure to PSI or BAR.

1. PSI (default)
2. BAR

# Operation

## RISE-ON-START

This setting brings the vehicle to ride height at key-on if below ride height.

1. Off (default)
2. On

## PRESET MAINTAIN

When enabled, the Preset Maintain will maintain the selected preset, whether pressure or height.

1. Off (default)
2. On

## MINIMUM DRIVING HEIGHT

Set the minimum vehicle ride height. The system will not deflate below this level while driving.

1. 0-100 PSI (pressure mode) or 0-100% (height mode)
2. Hold down the up or down button to cycle quickly to 0 or 100 PSI or press the buttons individually to go up or down 1 PSI at a time.
3. 25 PSI (pressure mode) or 25% (height mode) (default)

## PRESSURE/HEIGHT MODE

Set system to operate in height or pressure mode.

1. Height
2. Pressure (default)

## ANTI CROSS-LOAD/AXLE EQUALIZATION

Set system to equalize the axle to prevent cross-loading.

1. Off
2. On (default)

## SHOW MODE

This provides operation with ignition off for one ignition cycle. (Running compressor will drain the battery.)

1. Off (default)
2. On

## BLUETOOTH PAIRING

Set to “on,” to enable Bluetooth pairing with a compatible mobile device for one ignition cycle. If no display is present, pairing mode can be entered by: turning the ignition on 3 seconds, ignition off 3 seconds, ignition on.

# Setup

## SENSOR TOOL (HEIGHT MODE MUST BE ENABLED)

This tool is used to ensure that the range of the height sensors as installed are sufficient to provide optimal accuracy for the system. (Each time that this tool is used it will reset and initially show low range until the suspension is cycled to tell the system its range.)

1. At any time press the “Preset Ride” button to exit the tool.
2. By cycling the suspension up and down, the tool will determine the following:
   - Range low – Not enough range in the sensor to portray accurate data.
   - OK – The range of the sensor is adequate for accurate data.
   - Limit – The range of the sensor is at or beyond the bounds of acceptable data.

## COMPRESSOR* (SETUP)

### ON/OFF

Control the compressor manually. In the default setting of “Off” the compressor will operate normally. Selecting “On” will activate the compressor for troubleshooting.

1. Off (default)
2. On

### ENABLE/DISABLE

Enable or disable the compressor until the next ignition cycle.

1. Enabled (default)
2. Disabled

* The 3H/3P system can be installed with one or two compressors.

# Setup, Cont.

## COMPRESSOR (SETUP, CONT.)

### DUAL/SINGLE

Set based on whether a dual or single compressor setup is installed. If using a second compressor and harness, dual must be selected for proper operation.

1. Single (default)
2. Dual

### MAX PRESSURE

Set the maximum tank pressure. The compressor will turn on at 15 PSI below max tank pressure.

1. 150-200 PSI or 10342-13789 mBAR
2. Holding the up or down button quickly cycles between 150 PSI/10342 mBAR and 200/13789. A single press changes pressure one increment at a time.
3. 150 PSI (default)

### DUTY CYCLE

This is for the user to set the compressor duty cycle.

**⚠ WARNING** Setting the duty cycle higher than the manufacturer's recommended value may cause compressor damage.

**See Page 22 for compressor duty cycle and working pressure.**

1. 33%
2. 50% (default)
3. 66%
4. 75%
5. 100%

### MINIMUM BATTERY VOLTAGE

Set minimum battery voltage required to allow compressor to turn on.

1. 10-14 volts
2. 11 volts (default)

### FACTORY RESET

Resets all settings and calibration back to factory default.

1. Cancel (default)
2. Reset all

Cycle ignition to complete the factory reset.

# Calibration

## WIZARD

Run this program to complete calibration. At any time, cancel calibration by pressing “stop.”

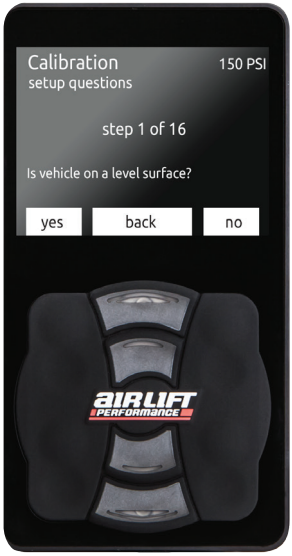


1. Make sure the vehicle is on a level surface and select “Yes.”
2. Verify that the front wheels are straight to prevent damage to fenders, then select “Yes.”
3. Verify nothing is under the vehicle that could cause undercarriage damage, then select “Yes.”
4. Verify that the manifold is securely mounted, then select “Yes.”

**NOTE** *An unmounted manifold will not allow Preset Maintain to function properly.*

5. Determine how many compressors are in use. If using a single compressor, select one. If using two compressors with the second compressor harness (part number: 27703) select two.
6. If height sensors are installed, select “Yes.” If running as a pressure only system, select “No.” If only running pressure, system will now skip to step 8.
7. If height sensors are installed, select whether to calibrate them automatically or manually. Most vehicles can be calibrated automatically. The manual option can be used when there is a custom setup where there may be concern about component interference at either high or low limits.
8. After selecting “Yes” the system will begin calibration. Selecting “No” will exit the calibration wizard.
9. System checks to make sure manifold is mounted in a proper orientation.
10. System is calibrating the accelerometer.
11. System is now calibrating the front axle for Pressure mode.
12. System is now calibrating the rear axle for Pressure mode. If using the system for Pressure only, calibration will complete after this step.

# Calibration, Cont.

## WIZARD

13. Height Sensor Calibration (Upper)
    a. If Auto Sensor Calibration was selected, the system will cycle the suspension to calibrate its upper limit position.
    b. If Manual Calibration was selected, the system will now ask for the user to set the “Upper Limits.” Do this by using the manual buttons to raise the suspension to its highest setting on all four corners. Press the middle button when complete.
14. Height Sensor Calibration (Lower)
    a. If Auto Sensor Calibration was selected, the system will now cycle the suspension to calibrate its lower limit position.
    b. If Manual Calibration was selected, the system will now ask for the user to set the “Lower Limits.” Do this by using the manual buttons to lower the suspension to its lowest setting on all four corners. Press the middle button when complete.
15. System will now check Height Sensor vehicle wiring (Only completes this if user selected Auto Sensor).
16. The system will now perform a movement calibration for height mode.
17. Once it has run through the calibration wizard successfully, it will say “Calibration Successful” and the system will then be ready for use.

# Calibration Detail Explained

## AUTO SENSOR LIMITS

When the program is completing the auto sensor calibration, make sure the wheels are straight and all people stand clear as the vehicle will move up and down during calibration. The user doesn't have to do anything during this portion of the calibration.

## MANUAL SENSOR LIMITS

Below is what is being completed during the wizard's manual sensor calibration. Use this option when making a custom setup where there may be concern about component interference at either high or low limits. *(e.g. Wheel to fender interference – if the system is aired out and the wheel and fender make contact before the suspension can reach its limit.)*

1. Set upper limit
   - Use the manual buttons to set the upper height sensor limit.
   - Press the ride preset button to continue.
2. Set lower limit
   - Use the manual buttons to set the lower height sensor limit.
   - Press the middle button to continue.
3. Calibration is complete.

## PRESSURE

Below is what the wizard is doing during the pressure calibration.

1. **Front calibration** – The system actuates the suspension through its range of travel to calibrate pressure mode on the front axle.
2. **Rear calibration** – The system actuates the suspension through its range of travel to calibrate pressure mode on the rear axle.
3. At any time, cancel calibration by selecting "stop."

# Calibration Detail Explained, Cont.

## HEIGHT

Below is what the wizard is doing during height calibration.
The system will actuate suspension through it's entire height range to calibrate height mode.

1. Movement calibration
   - A message will indicate completion of the movement calibration.
   - Press the middle button to continue.
2. At any time, cancel calibration by pressing "stop."

## MANIFOLD

Below is what the wizard is doing during manifold calibration.

1. If the manifold is mounted correctly, it will indicate "Complete – calibration successful."
2. If the manifold is mounted incorrectly, it will indicate "Fault – calibration failed."
3. If mounted incorrectly, follow the Installation Guide for proper mounting of the manifold and run calibration again.

# Firmware Updates

## MOBILE DEVICE APP

The app, which is free and requires no additional hardware, is available in the Apple App Store. The app will be available soon for Android devices in Google Play. Search for Air Lift Performance.

- Operation of the mobile app is similar to operation of the 3H/3P controller. The main difference are:
  - To access the menu screens, tap the gear in the upper right corner.
  - The sensor tool is only available on the controller.
- App users will get notifications that there is a firmware update, app update or other system update.
- Firmware updates can only be made through the mobile app.

After installing the system, all users should download the app and check for firmware updates.

Find direct links to the apps at **air-lift.co/3app.**

Check www.airliftperformance.com/firmware periodically for firmware updates.

# Firmware Updates, Cont.

## SWITCHING TO LANDSCAPE MODE

Users have the option of changing the orientation of the 3H/3P controller to landscape mode.

- To change modes, update the firmware and choose “Keypad Normal,” “Keypad Right” or “Keypad Left.”
- While the controller can be used with the display to the right or left of the keypad, it cannot be oriented so that the keypad is above the display.
- To rotate the keypad, remove the two screws on the back of the controller. Remove the keypad, rotate it to the preferred position and re-secure the screws to 14-16 oz.-in.

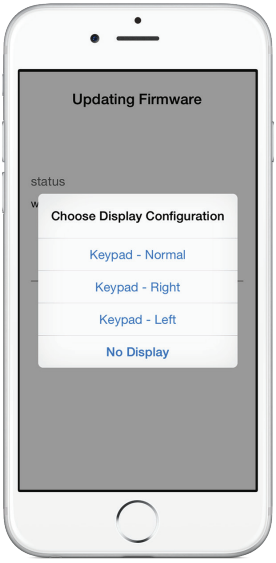


## 3H/3P DISPLAY ORIENTATION OPTIONS

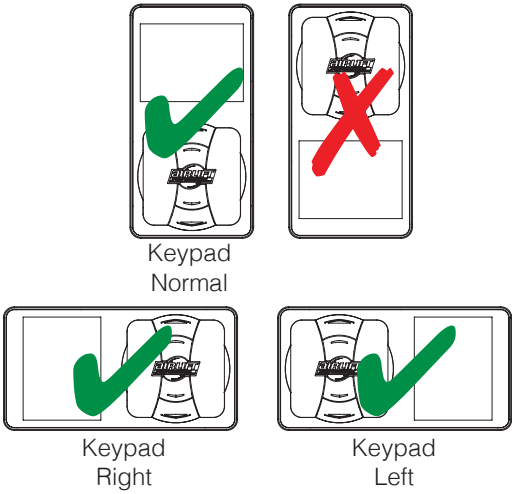

# Additional Information

## PRESET MODES

There are three standard preset modes used in this system. If the user chooses, the all-up and all-down buttons can be set as two additional presets which will follow the same requirement for operation below (see page 9).

Presets are viewed, used and changed/saved with the following procedures:

1. Press the appropriate preset key once to display current preset values.
2. Double press the preset key to obtain the preset value that is currently saved.
3. Press and hold the preset key to change the preset value.

## CHANGING PRESETS

1. Press and hold the preset key you want to change. The display will allow you to manually change those values using the corner keys. (Values will be shown as PSI for pressure and percentage for height).
2. Press and hold the preset key again to save your selected values.
3. To exit without saving the current preset, press any other preset button at any time.

## DEFAULT SETTINGS

1. Preset low – 25 PSI (pressure)/ 25% (height)
2. Preset ride – 50 PSI (pressure)/ 50% (height)
3. Preset high – 75 PSI (pressure)/ 75% (height)

**⚠ WARNING** It is possible to set the vehicle at a height that is below the minimum drive height threshold, then start driving. The 3H/3P system is a universal system and settings will be different for every user and vehicle.

# About

Select this option to see what version of software is running on the system, product serial number and Bluetooth identification address.

Users may need to provide this information when calling Air Lift Company customer service.

The manifold or display software can be updated using the mobile app.

Check www.airliftperformance.com/firmware periodically for firmware updates.

# System Messages

| Label | Fault | Problem |
|---|---|---|
| NOTICE | Calibration not completed | Customer attempts to use presets prior to calibration. |
| NOTICE | Manifold upside down, please re-mount | The manifold has been mounted in an unacceptable orientation. |
| ⚠ CAUTION | Leak detected on corner (FL, FR, RL, RR*) | A leak has been detected between manifold and the air spring that is causing a drop in air pressure. |
| ⚠ CAUTION | Check height wiring and plumbing (FL, FR, RL, RR*) | The system has detected that the either the wiring is incorrect or not responding or lines are plumbed incorrectly for the given corner. |
| ⚠ CAUTION | Waiting for tank to fill | Detected that tank pressure dropped 15 PSI below user defined max tank pressure value. |
| ⚠ DANGER | Height sensor failure (FL, FR, RL, RR*) | Detected that sensor signal has gone invalid or out of range for the given corner. |
| ⚠ CAUTION | Range fault | Height sensor range is too low to provide accurate data to the user and will need to be adjusted to provide adequate sensor travel. |
| ⚠ CAUTION | Limit reached | Height sensor travel is out of acceptable range of 10-90% of full sensor travel. Re-adjust sensor to be in range of acceptable wheel travel. |
| ⚠ CAUTION | Min drive height reached | The system has detected vehicle is moving and therefore prevented vehicle from going below minimum drive height. |
| ⚠ CAUTION | Low battery voltage | Vehicle has reached the user defined set value for minimum battery voltage used for disabling the compressor. |
| ⚠ CAUTION | High battery voltage | Vehicle has detected battery voltage above 16V. |
| ⚠ DANGER | Pressure sensor failure (FL, FR, RL, RR*) | Detected a pressure sensor failure at the manifold block for the corner sensor. |
| ⚠ CAUTION | Pressure preset mode disabled | System has detected a failure in the pressure sensor and disabled pressure preset. Can still operate height preset if installed. |
| ⚠ DANGER | Corner height sensor failure (FL, FR, RL, RR*) | Corner height sensor voltage is out of range. |

* FL = Front left corner
FR = Front right corner
RL = Rear left corner
RR = Rear right corner

# System Messages

| Label | Fault | Problem |
|---|---|---|
| ⚠ CAUTION | Corner height sensor near limit (FL, FR, RL, RR*) | Height sensor range is near limit of operation at the given corner. |
| ⚠ CAUTION | Compressor freeze | The system has detected no increase in tank pressure when compressor commanded on and compressor may be blocked. |
| ⚠ CAUTION | Compressor overheat | The compressor duty cycle has been reached and excessive usage has been detected which could overheat the compressor. |
| ⚠ CAUTION | Tank pressure sensor failure | The system detected a pressure sensor failure at the manifold block for the tank sensor.<br>System will disable the compressor when a tank pressure sensor failure has been detected to eliminate the opportunity of overfilling the tank. |
| ⚠ CAUTION | Tank pressure too low | Tank pressure has fallen below 85 PSI. Will reset when pressure reaches 85 PSI. |
| ⚠DANGER | Adjusting minimum ride height below 25% may result….. | Setting the minimum driving height below the 25% default may result in vehicle damage and personal injury. Agreeing to and understanding this safety concern will allow the system to be set below 25%. |

# VIAIR Compressor Duty Cycle/ Working Pressure

## COMPRESSOR RATINGS (STANDARD: 16444)

Max working pressure: 200 PSI
Duty cycle at rated pressure: 50% @ 200 PSI, 100% @ 100 PSI

Users have the option of installing several other compressors. Below are examples with their duty cycles and working pressures.

| Air Lift P/N VIAIR Compressor | Max Working Pressure | Duty Cycle @ Rated Pressure |
|---|---|---|
| 16130 (100C) | 130 PSI | 15% @ 100 PSI and 130 PSI |
| 16190 (325C) | 150 PSI | 33% @ 100 PSI and 150 PSI |
| 16380 (380C) | 200 PSI | 55% @ 200 PSI and 100% @ 100 PSI |
| 16400 (400C) | 150 PSI | 33% @100 PSI and 150 PSI |
| 16444 (444C) | 200 PSI | 50% @ 200 PSI and 100% @ 100 PSI |
| 16450 (450C) | 150 PSI | 100% @ 100 PSI and 150 PSI |
| 16480 (480C) | 200 PSI | 50% @ 200PSI and 100% @ 100 PSI |

# Notes

## Need Help?

Contact our customer service department by calling (800) 248-0892. For calls from outside the USA or Canada, call (517) 322-2144.

*Thank you for purchasing Air Lift Performance products!*

Air Lift Performance • 2727 Snow Road • Lansing, MI 48917 or
PO Box 80167 • Lansing, MI 48908-0167
Toll Free (800) 248-0892 • Overseas (517) 322-2144
Fax (517) 322-0240 • www.airliftperformance.com

Printed in
the USA